Haydon® kerk™
Motion Solutions

Precision Linear Motion Products Catalog and Design Guide

Leadscrews

Anti-Backlash Nuts

Custom Leadscrew Assemblies

Can-Stack Linear Actuators

Hybrid Linear Actuators

LRS™ Motorized Linear Rail Systems

ScrewRail® Assemblies

RGS® Rapid Guide Screws

Spline Shafts, Slides and Linear Guides

www.HaydonKerk.com

Haydon Motion Solutions kerk™

www.HaydonKerk.com

Experts in customization, innovative design and engineering

Haydon Kerk Motion Solutions, Inc. has the experience, the people, the technology, and the facilities to design a solution that will put your challenging ideas into practical motion. We take pride in our expertise in customizing product for specific application needs. Our on-site team is ready to assist you.

Haydon Kerk Motion Solutions, Inc. provides technology-driven industries sophisticated motion assemblies – a technology partner with on-site innovative design, engineering and manufacturing.

How to Use This Guide

Haydon Kerk Motion Solutions, Inc. *specializes in customized designs to solve complex engineering problems requiring precision linear motion.*

Before using this guide, take a few minutes to review the table of contents and scan through the entire catalog. Our catalog is divided into several families illustrating linear motion products that can be used for different levels of assemblies depending on your unique application needs.

SECTION 1 – LEADSCREW AND NUT ASSEMBLIES

The leadscrew product line offers an extensive array of non-ball leadscrews, anti-backlash nuts, and free-wheeling nuts for use as components in a motion system. Haydon Kerk Motion Solutions offers precision leadscrews and nuts that easily interface to many types of rotary power sources including stepper motors, servos, brushless DC, brush-type DC, and AC synchronous motors. Leadscrews and nuts are also versatile components in systems requiring combination mechanics such as "belt, pulley, leadscrew" systems, and "folded-over" linear actuator designs.

Leadscrews (charts on pages 12 to 16)

Nominal screw diameter: 3 mm to 24 mm (1/8-in to 15/16-in)
Leads (travel/revolution): 0.3 mm to 76 mm (0.012-in to 3-in)/revolution

Nut Styles (product summary and charts on pages 17 to 19)

8 designs of anti-backlash and freewheeling nuts as a function of load and maximum allowable drag torque.

SECTION 2 – STEPPER MOTOR LINEAR ACTUATORS

The stepper linear actuator product line offers an effective solution that simplifies the conventional way of translating rotary into linear motion. The rotary-to-linear conversion is unique; it takes place within the motor itself therefore eliminating the use of belts and pulleys, rack and pinion and other mechanical components. There's a detailed tutorial at the beginning of Section 2 that explains the technology.

There are 2 sub-families of stepper motor actuators

Hybrid Linear Actuators (product summary on page 37)

Footprint:	21 mm to 87 mm (0.8-in to 3.4-in) square
Force Output:	2 N to 2200 N (0.5 lb to 500 lb)
Linear Travel/step:	1.5 to 127 microns/step (0.00006-in to 0.005-in)/step

Can-Stack Linear Actuators (product summary on page 37)

Footprint:	15 mm to 46 mm (0.59-in to 1.8-in) diameter
Force Output:	7 N to 260 N (1.6 lb to 58 lb)
Linear Travel/step:	20 to 400 microns/step (0.0008-in to 0.016-in)/step

SECTION 3 – LINEAR RAILS AND SLIDES

The linear rails and slides product line should be considered when a more extensive linear motion solution is desired to minimize overall system material cost, engineering time, and assembly cost. The linear rails and slides are complete mechanical systems that include the linear bearing, rotary bearings, mechanical frame, precision screw and nut, and when required, a motor or integrated motor/electronic drive unit. Depending on the application requirements, the designer can configure for multiple-axis configurations.

Typical Configurations (see page 171 to 189)

- Travel distances (stroke lengths) up to 100-in
- Motorized or non-motorized
- Optional motor mounting bracket and slots for sensors
- Patented anti-backlash nuts or freewheeling nuts available

Contact Information

Haydon Kerk Motion Solutions, Inc.

www.HaydonKerk.com

North American HQ/Operations

Haydon Kerk Motion Solutions, Inc.
Haydon Products Division
1500 Meriden Road
Waterbury, CT 06705
Telephone: 203-756-7441
info@HaydonKerk.com

Haydon Kerk Motion Solutions, Inc.
Kerk Products Division
1 Kerk Drive
Hollis, NH 03049
Telephone: 603-465-7227
info@HaydonKerk.com

Asia Operations

Haydon Linear Motors Co., Ltd.
Xianlong Industrial Park
No. 110, Lane 4, Xinyuan Road
New District, Changzhou, China 213031
Telephone: 86-519-85113316 / 85113312 / 88221022
Sales: 86-519-85123096 / 85139199 / 85139789
info@HaydonKerk.com.cn

Europe Operations

Haydon Motion Europe
57 rue des Vignerons
44220 Coueron - France
Telephone: 33 2 40 92 87 51
info-Europe@HaydonKerk.com

Haydon Kerk Motion Solutions, Inc. © All rights reserved.
This catalog was produced for exclusive use by customers of Haydon Kerk Motion Solutions, Inc. No part of this book or technical information can be used, reproduced or altered in any form without approval or proper authorization from Haydon Kerk Motion Solutions, Inc. and its global affiliates. For updated information contact Haydon Kerk Motion Solutions, Inc. # hoi

Company Overview

Who We Are 1

Innovation in Motion: Technology Patents 2

SECTION 1: LEADSCREW ASSEMBLIES

Leadscrew and Nut Overview 4

Technology

Anti-Backlash Technology 5

Lubrication 6

- **Kerkote®** 6
- **Black Ice™** 6

Materials

- **303 Stainless Steel** 7
- **Kerkite® Composite Polymers** 7
- **Special Materials** 7

Design and Engineering Data 8

Leadscrews

Part Number Construction 11

Leadscrew Size List 12

Anti-Backlash Nuts

Leadscrew Nut Styles 17

Nut Feature Matrix 18

Product Comparison Chart 19

CMP Series 20

ZBX Series 21

KHD Series 23

WDG Series 24

NTB Series 25

VHD Series 27

ZBA Series 28

NTG Series 30

Free-Wheeling and Specialty Nuts

BFW Series 31

Mini Series 33

Custom Nuts 35

SECTION 2: STEPPER MOTOR LINEAR ACTUATORS

Stepper Motor Linear Actuators Product Summary 37
Stepper Motor Tutorial 38
- Resonance 50
- Drives 51
- Summary 52
- Terminology 52

Hybrid Linear Actuators

Product Overview 53
Part Number Construction 54
Wiring/Stepping Sequence 55

Hybrid Linear Actuators

21000 Series (Size 8) 56
28000 Series (Size 11) 60
28000 Series (Size 11) Double Stack 63
35000 Series (Size 14) 66
35000 Series (Size 14) High Resolution 70
35000 Series (Size 14) Double Stack 72
43000 Series (Size 17) 75
43000 Series (Size 17) High Resolution 79
43000 Series (Size 17) Double Stack) 81
57000 Series (Size 23) 84
57000 Series (Size 23) High Resolution 87
57000 Series (Size 23) Double Stack 89
87000 Series (Size 34) 92

Accessories and Options
- Integrated Connectors 95
- Encoders 96
- Home Position Switch 98
- Proximity Sensor 98
- PTFE Option 98
- Custom Assemblies 98

Hybrid Dual Motion Actuators

Product Overview 99
Part Number Construction 99

35000 Series (Size 14) Dual Motion 100
43000 Series (Size 17) Dual Motion 101

Can-Stack Linear Actuators

Product Overview	103
Part Number Construction	104
Wiring/Stepping Sequence	105
15000 Series (Ø 15 mm)	106
20000 Series (Ø 20 mm)	108
• Z20000 Series (Ø 20 mm)	112
26000 Series (Ø 26 mm)	116
• Z26000 Series (Ø 26 mm)	120
• Extended Stroke Z26000 Series (Ø 26 mm)	122
• High Resolution 26000 Series (Ø 26 mm)	126
36000 Series (Ø 36 mm)	129
• High Resolution 36000 Series (Ø 36 mm)	133
46000 Series (Ø 46 mm)	136
High Temperature Can-Stacks	141
Options for Can-Stacks:	
• PTFE Coated Leadscrews	142
• Switches / Proximity Sensors	143
• Custom Assemblies	144

Can-Stack Rotary Actuators

Product Overview	145
Part Number Construction	145
Wiring/Stepping Sequence	146
Z20000 Rotary Series (Ø 20 mm)	147
26000 Rotary Series (Ø 26 mm)	149
Z26000 Rotary Series (Ø 26 mm)	152
36000 Rotary Series (Ø 36 mm)	155
46000 Rotary Series (Ø 46 mm)	158
80000 Pancake Rotary (Ø 80 mm)	161
Planetary Gear Train Pancake Rotary	162

AC Synchronous Linear Actuators

AC Synchronous Hybrid Actuators	164
AC Synchronous Can-Stack Actuators	165
AC Synchronous Rotary Actuators	165

Stepper Motor Drives

DCM8028 & DCM8055 Micro-Stepping Drives 166
DCS4020 Bipolar Chopper Drive 167
40105 Bipolar Chopper Drive 168
44103 Whisper Drive 169

SECTION 3: LINEAR RAILS, GUIDES, AND SPLINES

Overview 170

RGS® Guide Screws and Slides

Part Number Construction 172
RGS® Rapid Guide Screws 172
RGS/RGW Linear Slide Series 174
Sensor Mounting Kit 174
RGS® Linear Guide Series 176
Part Number Construction 176

LRS™ Linear Rails

LRS™ Non-motorized Slides 178
Part Number Construction 179
LRS™ Motorized Slides 179

ScrewRail® Linear Actuators

Overview 180
Part Number Construction 181

SRA Series: General Purpose 182
SRZ Series: Anti-Backlash 183
End Supports 184
SRA Selector Chart 185
SRZ Selector Chart 186

Spline Shafts, Rails and Bushings, Guides

Overview 187
Part Number Construction 187

Spline Shafts 188
Rails and Bushings 189

Haydon Kerk Motion Solutions, Inc. • www.HaydonKerk.com • Phone: 800.243.2715 • International: 203.756.7441

Whether an application requires a standard item, custom design, new product, or a more sophisticated complete assembly, Haydon Kerk Motion Solutions, Inc. experienced engineering team will assist you.

We take pride in our expertise in customizing products for specific application needs.

Haydon Kerk Motion Solutions, Inc. is proud to announce the merging of two world class brands in the field of linear motion. Haydon™, headquartered in Waterbury, CT and Kerk®, headquartered in Hollis, NH have combined forces. Together, we now offer an extensive range of linear motion products.

Recognized as a leader in motor miniaturization, Haydon Switch and Instrument has been building electric motors and stepper motor based linear actuators for almost half a century. The company's manufacturing facility, located on ten acres in the heart of Connecticut, supports today's most efficient technology and manufacturing methods and is ISO 9001 certified. **Kerk Motion Products was established in 1976 and has grown to be one of the world's largest exclusive manufacturers of non-ball lead screws, linear rails, and actuator systems.** Our internationally patented, anti-backlash designs and materials provide high accuracy, unsurpassed repeatability, and long life in a full range of motion control applications. Together, Haydon Kerk Motion Solutions has over 80 years combined experience in precision motion control products.

Haydon Kerk Motion Solutions, Inc. designs and manufactures linear motion products used in much of today's sophisticated medical equipment, laboratory instrumentation, machinery automation, printing, and other applications that require precision motion.

The products described within this catalog may be protected by and are not limited to the following patents:

Haydon™ Patents

CANADA:
1,302,472
2,302,223

CHINA:
ZL2003 3 0102644.4
ZL2003 3 0100458.1
ZL2003 3 0100459.6
ZL2003 3 0100461.3
ZL2003 3 0100462.8
ZL2003 3 0100460.9

EUROPE:
1,258,075

GERMANY:
DE 60,115,604 T2

JAPAN:
2856252

TAIWAN:
191,649

UNITED KINGDOM:
2,196,799

UNITED STATES:
5,465,020
6,362,547
5,798,592
6,211,591
4,841,189
4,884,333
6,121,561
6,774,517
6,603,229
6,932,319
5.910,192
6,756,705
6,531,798
D482,707
5,126,605
6,150,789
D497,620
6,222,294

Kerk® Patents

CANADA:
2,065,009
2,208,405
2,334,325
2,286,737

EUROPE:
0 487 662 B1
0 965 008 B1
0 799 392 B1
1 084 355 B1
0 975 466 B1

JAPAN:
2001-513870
(P2001-513870A)

UNITED STATES:
5,027,671
6,240,798 B1
5,913,940
5,732,596
6,131,478
6,041,671
5,913,941
5,937,702
6,202,500
6,415,673 B1
6,422,101 B2
6,467,362 B2
2008/0022794 A1
5,601,372
6,099,166
2007/0295128 A1
6,117,249
4,974,464

Other patents pending

Leadscrew Assemblies

Haydon Kerk Motion Solutions, Inc. ***products have been designed specifically for motion control applications. They are not compromised adaptations of general purpose screws or nuts. The screw thread form is designed for maximum life, quiet operation, and compatibility with Haydon Kerk Motion Solutions anti-backlash nut designs.***

KERK® LEADSCREWS are available in standard diameters from 1/8-in (3.2mm) to 15/16-in (23mm), with standard leads from .012-in to almost 4-in (0.30mm to 92mm) including hard metric and left hand threads. Custom sizes and leads can be special ordered. Most stock screws are manufactured from 303 stainless steel and are produced with Haydon Kerk Motion Solutions exclusive precision rolling process. Other materials are available on special order. Positional bi-directional repeatability (with Kerk anti-backlash nut) is within 50 micro-inches (1.25 micron) and standard lead accuracy is better than 0.0006-in./in. (mm/mm). Lead accuracies are available to .0001-in./in. (mm/mm). Haydon Kerk Motion Solutions total in-house manufacturing and quality control assure uniform and consistent products.

KERK® NUTS are available in 8 standard anti-backlash designs (CMP, ZBX, WDG, NTB, KHD, VHD, NTG, ZBA); general purpose BFW Series plus the Mini Series. (See Product Comparison Chart for size availability). Custom nut configurations and mountings are also readily available. The Kerk brand internationally patented anti-backlash designs provide assemblies which are wear compensating with low frictional drag and exceptional positional repeatability. Operation to more than 300 million inches of travel can be achieved. Haydon Kerk Motion Solutions provides nuts in a wide range of wear resistant, self-lubricating thermoplastic materials.

Axial Take-up Mechanism

The standard method for taking up backlash is to bias two nut halves axially using some type of compliant spring. (Wavy washer, compression spring, rubber washer, etc.)

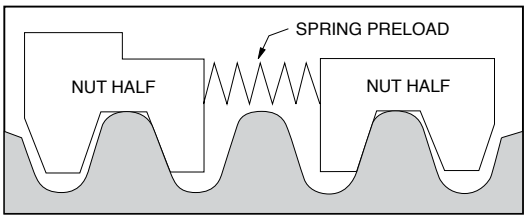

The unit is very stiff in the direction in which the nut half is loaded against the flank of the screw thread. However, in the direction away from the screw thread, the nut is only as axially stiff as the amount of preload which the spring exerts.

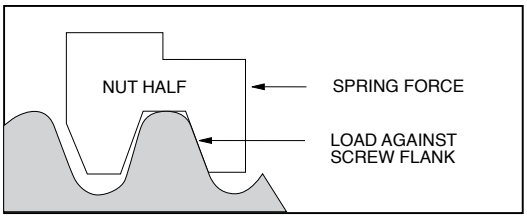

For example, if the maximum axial load to which the system is subjected is 50 lbs., the amount of spring preload must be equal to, or greater than, 50 lbs. in order to maintain intimate screw/nut contact. The problems arising from preloading in this manner are increased drag torque and nut wear.

Obviously, the higher the load at the screw/nut interface, the higher the required torque to drive the nut on the screw and the more susceptible the unit is to nut wear.

An alternate method replaces the spring with a stiff spacer sized to fit exactly between the two nut halves.

There is no excessive preload force at the interface and the unit is capable of carrying high axial loads in either direction with no backlash.

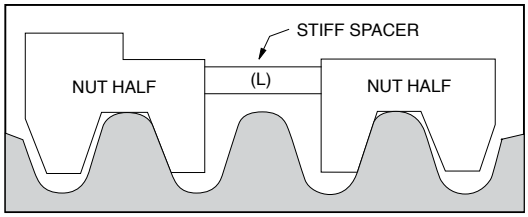

This is fine initially. However, as use time increases, wear begins on the nut threads causing a gap to develop between the spacer (L) and the nut halves.

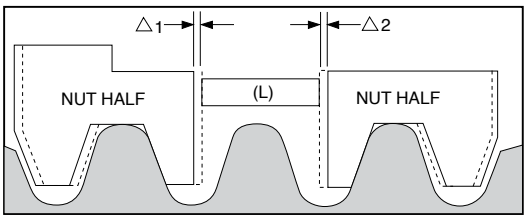

This gap (Δ1 + Δ2) is now the amount of backlash which has developed in the unit. This backlash can be removed by replacing the stiff spacer with a new spacer equal to (L + Δ1 +Δ2). This process, although effective, would be extremely costly and difficult to implement on a continuous basis.

The Solution

What is needed, then, is a stiff spacer which will continually expand to accommodate the wear which occurs during use.

This is done by creating a spacer threaded at one end with a complimentary nut torsionally biased to advance when a gap develops.

The thread at the end of the spacer is a fine helix such that an axial load will not backdrive the nut once spacer growth has occurred.

The preload on the unit is only the amount necessary to turn the spacer nut on the spacer rod and is independent of the external system loadings. We thus have a self-wear compensating unit which has extremely low frictional drag torque yet high axial stiffness.

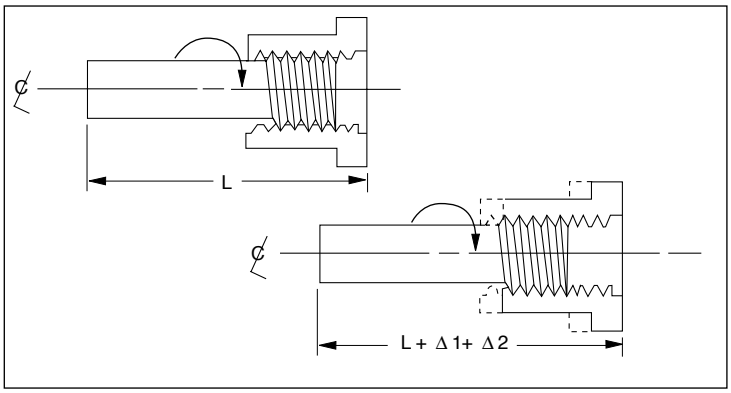

Kerkote® and Black Ice™ TFE Coatings

Haydon Kerk Motion Solutions, Inc. offers multiple options for lubrication. All Kerk® leadscrew nuts feature self-lubricating polymers. When maximum performance is required, Kerkote® and Black Ice™ TFE coatings provide unmatched results in the most demanding applications.

The purpose of TFE coating is to supply a more even distribution of lubricant than is normally found when using standard self-lubricating plastics on steel. The wear life, coefficient of friction and resulting torque to drive a lead screw assembly are highly governed by the ability of the engineered plastic to supply sufficient lubrication to the nut/screw interface. The inability of the internal lubricating agents in some plastics to consistently migrate to the surface may result in erratic drag torques and unpredictable wear.

Kerkote® TFE Coating

Kerkote TFE coating covering the entire screw surface results in an extremely even lubrication distribution. Test results indicate system torque requirements are consistently low with little or no change in required frictional driving torque, even with changes in motor R.P.M. Haydon Kerk Motion Solutions has developed a custom composition Kerkote TFE specifically for our lead screw and nut materials. It is applied using an automated process and provides extended nut life and smooth operation with little additional cost.

Kerkote TFE is a soft coating, a long-term dry lubricant that is optimized for softer plastics like acetals and nylons, with or without mechanical reinforcement. Lubrication to the nut/screw interface occurs by the nut picking up Kerkote TFE particles from the coating as well as from the migration of the internal lubricant within the plastic nut. Although care is taken to ensure that chips and voids do not occur in the coating, small voids have been shown to have no effect on system performance. The transfer of TFE to the nut continues throughout the operating life of the assembly as long as the nut periodically travels over areas with Kerkote TFE coating. The lubricant, although solid, also has some “spreading” ability as in fluid lubricants. Kerkote TFE coated screws provide the maximum level of self-lubrication and should not be additionally lubricated or used in environments where oils or other lubricant contamination is possible.

Black Ice™ TFE Coating

Black Ice TFE coating shares many of the benefits of Kerkote TFE but, in contrast, is a hard coating that offers exceptional durability in all types of environments, with virtually any type of polymer nut. Black Ice TFE coating remains on the screw, offering a low friction surface upon which the nut travels. Rather than acting as a dry lubricant, Black Ice TFE is an anti-friction coating whose surface properties displace the metal to which it is applied. Though it is not intended for use with metal or glass fiber reinforced nuts, Black Ice TFE is bonded securely to the screw’s surface and can withstand abrasion from contamination, rigid polymer systems, fluid impingement and wash down applications. Black Ice TFE can be used in the presence of more aggressive environment conditions, or anywhere reduced friction and a permanent coating is desired.

Both Kerkote and Black Ice TFE coatings offer the advantages of dry lubrication. These are maintenance-free coatings that are designed to last the life of the product. They are intended to be used without additional lubricants, thereby further increasing the value of Kerk leadscrew assemblies through elimination of the most common failure of screw driven drives, lubrication failure.

There are certain applications where external lubrication may be desired. These include the use of nut materials such as glass reinforced plastic or metal. Greases, when used properly can provide unique capabilities and Haydon Kerk Motion Solutions does offer a selection of greases developed specifically for these applications. Please contact a sales engineer for assistance selecting the best lubricant for your requirements.

303 Stainless Steel

Kerk® brand leadscrews and linear rails start with premium grade 303 stainless steel. Haydon Kerk Motion Solutions, Inc. has identified the material properties most critical for producing the very high quality rolled steel screws in the world and controls these to levels unmatched in the industry. Because of our leadership position, we are able to utilize this exceptional quality steel without having to charge premium prices.

Kerk stainless steel leadscrews and guide rails are corrosion resistant, non-magnetic, and compatible with many demanding processes. The ideal starting point for a maintenance-free product, this premium quality stainless steel is being used in numerous applications including medical applications, clean rooms, food and human contact, salt spray, cryogenics and vacuum.

Kerkite® Composite Polymers

In addition to the Kerk® self-lubricating acetal nut material, Haydon Kerk Motion Solutions offers a variety of custom compounded Kerkite composite polymers. Kerkite polymers are a family of high performance materials that offer exceptional wear properties with the cost and design advantages afforded through injection molding. Kerkite polymers offer a variety of mechanical, thermal and electrical properties and are compatible with many chemicals and environmental conditions.

Kerkite Composite Polymers are available options for most Kerk Leadscrew Nuts and are standard materials for Linear Rail and Spline Shaft bushings, RGS® Carriages and Screwrail® Bushings and End Supports. Each member of the Kerkite family is compounded with lubricants, reinforcements and thermoplastic polymers formulated to provide optimum performance in its target conditions and applications, resulting in superior performance and extended life.

A cornerstone of the Haydon Kerk Motion Solutions advantage is design flexibility. Kerkite Composite Polymers, along with our injection molding and mold making capabilities, offer huge design advantages and cost savings compared with non-moldable materials. Kerkite high performance polymers outperform other plastics and outlast metal bushings and bearings. When combined with Kerkote® or Black Ice™ TFE coatings, Kerkite Composite Polymers have been shown to provide hundreds of millions of inches of travel in customer applications while continuing to maintain precise, accurate motion and positioning.

Special Materials

In addition to the Kerk standard material – 303 stainless steel, self lubricating acetal and Kerkite high performance composite polymers – we also work with a vast array of custom materials. Kerk has rolled screws in many other materials, including 316 stainless, 400 series stainless, precipitate hardening materials, carbon steel, aluminum, and titanium. Kerk nuts had been produced in many alternative plastics including PEEK, polyester, Torlon®, Vespel®, PVDF, UHMW, Ertalyte® and customer-supplied specialty materials. We have also provided metal nuts made from bronze, brass, and stainless steel.

With so much flexibility in our manufacturing process, if the material can be molded, machined, ground, or rolled, Haydon Kerk Motion Solutions can likely process it using state of the art machine tools, injection molding and mold making, grinding and thread rolling equipment. Haydon Kerk Motion Solutions excels at supplying the best overall solution to meet our customers' requirements. Contact Haydon Kerk Motion Solutions to find out how you can benefit from these choices.

Design and Engineering Data

Screw Accuracy
Haydon Kerk Motion Solutions, Inc uses a unique precision rolling process for screw manufacturing. Standard lead accuracy for Kerk screws is .0006 in./in. (mm/mm). Lead accuracies are available up to .0001 in./in. (mm/mm). Please consult the factory for higher lead accuracies. Assemblies have an extremely high bi-directional repeatability of 50 micro-inches (1.25 micron).

End Machining
Haydon Kerk Motion Solutions can custom machine screws to your specifications or provide cut-to-length screws for your own machining.

Critical Speed
This is the rotational speed at which a screw may experience vibration or other dynamic problems. See CRITICAL SPEED CHART to determine if application parameters result in speed approaching critical. To minimize critical speed problems: use a longer lead, choose a larger diameter or increase bearing mount support.

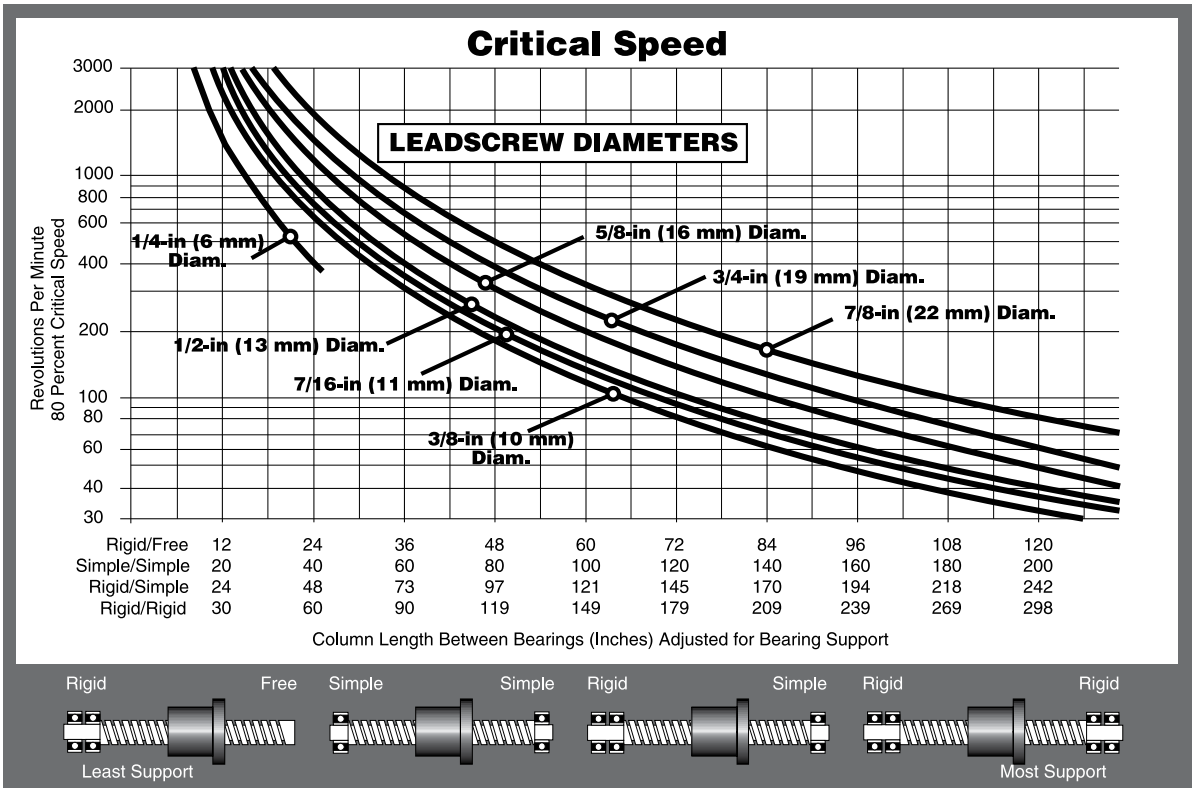

Lengths
Lengths can be specified up to 12 ft. (4M) from stock, (depending on diameter and lead). Cut to length screws are offered in 6-in increments (6-in, 12, 18,....) +1.0-in/-0-in.

Lead
Advancement per revolution. All screws are listed by lead, not pitch.
Lead = Pitch x Number of Starts

Pitch
Crest-to-crest distance or one divided by threads per inch. (On a multiple start thread, the pitch equals the lead divided by the number of starts.)

Traverse Speed

The nut materials we use provide long wear-life over a wide variety of conditions. However, very high loads and/or speeds will accelerate nut wear. Special materials may be required for these situations. We offer the following guidelines for continuous duty linear traversing speeds for optimum life:

Lead	Traverse Speed	Lead	Traverse Speed
1/10 - 1/2-in	4-in/sec.	1 - 12 mm	100 mm/sec.
1/2 - 1-in	10-in/sec.	12 - 25 mm	250 mm/sec.
1 - 2 1/2-in	30-in/sec.	25 - 60 mm	760 mm/sec.

Maximum Load

Although the Kerk® Anti-Backlash Assemblies are capable of withstanding relatively high loads without catastrophic failure, these units have been designed to operate under the loading shown in the size charts.

Efficiency

Efficiency is the relationship of work input to work output. It should not be confused with mechanical advantage. Listed efficiencies are theoretical values based on Kerkote® TFE coated screws.

Torque

The required motor torque to drive a lead screw assembly is the sum of three components: the **inertial torque**, **drag torque**, and **torque-to-move load**. It must be noted that this is the torque necessary to drive the lead screw assembly alone. Additional torque associated with driving frictional bearings and motor shafts, moving components, and drag due to general assembly misalignment must also be considered.

Inertial Torque:

$$T_j = I\,\alpha$$

Where I = screw inertia
α = angular acceleration

Drag Torque:

The Kerk Anti-Backlash Assemblies are typically supplied with drag torque of 1 to 7 oz.-in. The magnitude of the drag torque is dependent on the standard factory settings or settings specified by the customer. Generally, the higher the preset force, the better the Anti-Backlash characteristics.

Torque-to-Move:

$$T_L = \frac{\text{LOAD x LEAD}}{2\pi \text{ x EFFICIENCY}}$$

Back Driving

Sometimes referred to as reversibility, back driving is the ability of a screw to be turned by a thrust load applied to the nut. Generally, back driving will not occur when the screw lead is less than 1/3 the diameter for uncoated screws or 1/4 the diameter for Kerkote® TFE coated screws. For higher leads where back driving is likely, the torque required for holding a load is:

$$T_b = \frac{\text{LOAD x LEAD x BACKDRIVE EFFICIENCY}}{2\pi}$$

Screw Straightness

Screw straightness is measured as Total Indicator Runout(TIR). The standard straightness for lead screws is .003-in/ft. Haydon Kerk Motion Solutions can provide tighter specifications on customer request.

All screws are hand straightened before shipping.

Mechanical Properties

Screw Intertia

Screw Size inch (mm)	Screw Inertia (oz-inch sec²/inch)
1/4 (6)	.3 x 10 $^{-5}$
5/16 (8)	5 x 10 $^{-5}$
3/8 (10)	1.5 x 10 $^{-5}$
7/16 (11)	3.5 x 10 $^{-5}$
1/2 (13)	5.2 x 10 $^{-5}$
5/8 (16)	14.2 x 10 $^{-5}$
3/4 (19)	30.5 x 10 $^{-5}$
7/8 (22)	58.0 x 10 $^{-5}$
15/16 (24)	73.0 x 10 $^{-5}$

Anti-Backlash Life

Series	Without Kerkote® TFE Coating inch (cm)	With Kerkote® TFE Coating inch (cm)
CMP	40 to 60 million (100 to 150 million)	150 to 200 million (380 to 500 million)
ZBA	5 to 10 million (12 to 25 million)	15 to 40 million (38 to 100 million)
ZBX	40 to 60 million (100 to 150 million)	150 to 200 million (380 to 500 million)
KHD	80 to 100 million (200 to 250 million)	180 to 230 million (450 to 580 million)
WDG	100 to 125 million (250 to 315 million)	200 to 250 million (500 to 635 million)
NTB	100 to 125 million (250 to 315 million)	200 to 250 million (500 to 635 million)
VHD	200 to 225 million (500 to 570 million)	300 to 350 million (760 to 880 million)
BFW	N/A, Typical Backlash .003 to .010 (.076 to .25)	N/A, Typical Backlash .003 to .010 (.076 to .25)
NTG	5 to 10 million (12 to 25 million)	15 to 40 million (38 to 100 million)

Anti-backlash life is defined as the nut's ability to compensate for wear while maintaining its zero backlash properties. Above life data is based on 25% of the dynamic load rating. NTB style does not include mini series sizes. Life will vary with loading, operating environment, and duty cycle. The longer screw leads generally provide longer life.

Mechanical Properties

Leadscrew

Material	Surface Finish
303 Stainless Steel (options available)	Better than 16 micro inch

Nuts

Material	Tensile Strength	Coefficient of Expansion
Polyacetal with Lubricating Additive	9,700 psi	6.0 x 10 $^{-5}$ in/in/°F

Assembly

Standard Operating Temp. Range	Coefficent of Friction Nut to Screw
32 - 200° F* (0 - 93° C)*	Static = .08 .08 ** Dynamic = .15 .09 **

* Very high or low temperatures may cause significant changes in the nut fit or drag torque. Please call Haydon Kerk Motion Solutions™ for optional temperature range materials.
** with Kerkote® TFE Coating

Dimensional Tolerances

Inch

.X	± .02
.XX	± .010
.XXX	± .005

Metric

< L 4	± 0.1
4 < L ≤ 16	± 0.15
16 < L ≤ 63	± 0.2
63 < L ≤ 250	± 0.3

Grease Compatibility Chart

Nut Type	Grease	Lubrication Coatings Kerkote®	Black Ice™
CMP	Yes	Yes	Yes
ZBX	Yes	Yes	Yes
ZBA	Yes	Yes	Yes
KHD	No	Yes	Yes
VHD	No	Yes	Yes
WDG	No	Yes	Yes
BFW	Yes	Yes	Yes
NTB	No	Yes	Yes
NTG	Yes	Yes	Yes

Haydon Kerk Motion Solutions, Inc. • www.HaydonKerk.com • Phone: 800.243.2715 • International: 203.756.7441

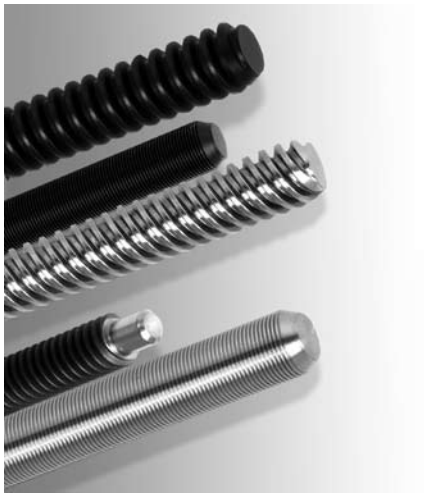

Kerk® Leadscrews

KERK® LEADSCREWS are available in standard diameters from 1/8-in (3.2mm) to 15/16-in (23mm), with standard leads from .012-in to almost 4-in (0.30mm to 92mm) including metric and left hand threads. Custom sizes and leads can be special ordered. Most stock screws are manufactured from 303 stainless steel and are produced with Haydon Kerk Motion Solutions exclusive precision rolling process. Other materials are available on special order. Positional bi-directional repeatability (with Kerk anti-backlash nut) is within 50 micro-inches (1.25 micron) and standard lead accuracy is better than 0.0006-in./in. (mm/mm). Lead accuracies are available to .0001-in./in. (mm/mm). Please consult factory for more details. Haydon Kerk Motion Solutions total in-house manufacturing and quality control assure uniform and consistent products.

Identifying the part number codes when ordering

ZBX	F	K	R	–	012	–	0012	–	XXXX

Prefix: Nut Series

CMP
ZBX
WDG
NTB
KHD
VHD
NTG
ZBA
BFW

LSS
(Screw Only)

Nut Mounting Style

A = Flanged (Triangular)
F = Flanged (Round)
P = Flange with pilot
T = Threaded
S = Screw only

Lubrication

S = Uncoated
K = Kerkote® TFE Coating
G = Grease HSS-17 Standard
N = Nut only

Thread Direction

R = Right hand
L = Left hand
(Refer to leadscrew charts for availability)

Diameter Code

(Refer to leadscrew charts)

Nominal Thread Lead Code

(Refer to leadscrew charts)

Unique Identifier

Number assigned by Haydon Kerk Motion Solutions *(for added features such as end machining, custom configurations, etc.)*

EXAMPLES:

WDGABR-037-0125-XXXX = Assembly: WDG Series Nut, triangular flanged mount, Black Ice™ TFE coating, right hand thread, 3/8-in nominal screw diameter, 0.125 thread lead, without an assigned unique identifier

ZBXTKR-043-0250-XXXX = Assembly: ZBX Series Nut, thread mounting, Kerkote® TFE coating, right hand thread, 7/16-in nominal screw diameter, 0.250 thread lead, without an assigned unique identifier

Special environments (temperature, clean room, contaminents, etc.)

For applications assistance or order entry, call your the Haydon Kerk Motion Solutions Leadscrew Assemblies technical advisors at 603.465.7227.

NOTE:
- Not all thread leads are available in all screw diameters
- New nuts and leads are continually being added. Contact Haydon Kerk Motion Solutions for latest availability.

Leadscrew Size List

Diameter (inches)	Diameter (mm)	Diameter Code	Lead (inches)	Lead (mm)	LEAD CODE	Left Hand Available	Outside Diameter (for Reference) (inches)	Outside Diameter (for Reference) (mm)	Root Diameter (for Reference) (inches)	Root Diameter (for Reference) (mm)	Efficiency %*	Compatible Nut Styles
1/8	**3.2**	012	0.024	0.61	**0024**		0.129	3.28	0.093	2.36	44	**NTB NTG BFW**
			0.039	1.00	**0039**		0.129	3.28	0.094	2.39	57	
			0.048	1.22	**0048**		0.129	3.28	0.093	2.36	61	
			0.075	1.91	**0075**		0.129	3.28	0.093	2.36	70	
			0.096	2.44	**0096**	●	0.129	3.28	0.093	2.36	75	
			0.125	3.18	**0125**	LH Only	0.125	3.18	0.078	1.98	80	
0.132	**3.3**	013	0.020	0.50	**0020**		0.132	3.35	0.104	2.64	42	**NTB NTG BFW**
			0.039	1.00	**0039**		0.132	3.35	0.080	2.03	61	
			0.079	2.00	**0079**		0.132	3.35	0.080	2.03	75	
			0.157	4.00	**0157**		0.132	3.35	0.080	2.03	84	
			0.315	8.00	**0315**		0.132	3.35	0.080	2.03	87	
9/64	**3.6**	014	0.012	0.30	**0012**		0.140	3.56	0.123	3.12	26	**NTB NTG BFW**
			0.024	0.61	**0024**		0.140	3.56	0.105	2.67	43	
			0.048	1.22	**0048**		0.140	3.56	0.081	2.06	62	
			0.096	2.44	**0096**		0.140	3.56	0.081	2.06	75	
			0.394	10.00	**0394**		0.140	3.56	0.102	2.59	86	
5/32	**4**	016	0.033	0.84	**0033**	●	0.156	3.96	0.116	2.95	45	**NTB NTG BFW**
			0.050	1.27	**0050**	LH Only	0.156	3.96	0.096	2.44	59	
			0.094	2.39	**0094**		0.164	4.17	0.128	3.25	67	
			0.125	3.18	**0125**		0.168	4.27	0.130	3.30	74	
			0.250	6.35	**0250**		0.156	3.96	0.130	3.30	83	
			0.375	9.53	**0375**		0.156	3.96	0.130	3.30	85	
			0.500	12.70	**0500**		0.156	3.96	0.130	3.30	86	
3/16	**5**	018	0.020	0.50	**0020**		0.188	4.78	0.163	4.14	30	**CMP WDG NTB NTG BFW**
			0.025	0.64	**0025**		0.188	4.78	0.150	3.81	39	
			0.039	1.00	**0039**		0.188	4.78	0.144	3.66	47	
			0.050	1.27	**0050**		0.188	4.78	0.124	3.15	58	
			0.100	2.54	**0100**		0.188	4.78	0.136	3.45	69	
			0.1875	4.76	**0188**		0.188	4.78	0.167	4.24	78	
			0.200	5.08	**0200**		0.188	4.78	0.124	3.15	82	
			0.375	9.53	**0375**		0.188	4.78	0.161	4.09	84	
			0.400	10.16	**0400**		0.188	4.78	0.124	3.15	84	
			0.427	10.85	**0427**		0.188	4.78	0.162	4.11	85	
			0.500	12.70	**0500**	●	0.188	4.78	0.142	3.61	86	
7/32	**5.6**	021	0.024	0.61	**0024**		0.218	5.54	0.181	4.60	31	**WDG NTB NTG BFW**
			0.03125	0.79	**0031**		0.204	5.18	0.160	4.06	39	
			0.048	1.22	**0048**		0.216	5.49	0.156	3.96	50	
			0.050	1.27	**0050**		0.200	5.08	0.135	3.43	52	
			0.0625	1.59	**0063**		0.218	5.54	0.142	3.61	60	
			0.096	2.44	**0096**		0.218	5.54	0.156	3.96	66	
			0.192	4.88	**0192**		0.218	5.54	0.156	3.96	78	
			0.250	6.35	**0250**	●	0.204	5.18	0.140	3.56	81	
			0.384	9.75	**0384**		0.218	5.54	0.159	4.04	86	

Shaded areas have been translated from their designed inch or mm dimension to an equivalent mm or inch dimension.

*Listed efficiencies are theoretical values based on Kerkote® TFE coated leadscrews

Leadscrew Size List

Diameter (inches)	Diameter (mm)	Diameter Code	Lead (inches)	Lead (mm)	LEAD CODE	Left Hand Available	Outside Diameter (for Reference) (inches)	Outside Diameter (for Reference) (mm)	Root Diameter (for Reference) (inches)	Root Diameter (for Reference) (mm)	Efficiency %*	Compatible Nut Styles
1/4	6	025	0.024	0.61	0024		0.250	6.35	0.218	5.54	28	CMP ZBX ZBA WDG NTB NTG BFW
			0.025	0.64	0025		0.250	6.35	0.214	5.44	30	
			0.03125	0.79	0031		0.250	6.35	0.208	5.28	34	
			0.039	1.00	0039		0.250	6.35	0.190	4.83	40	
			0.048	1.22	0048		0.250	6.35	0.190	4.83	45	
			0.050	1.27	0050	●	0.250	6.35	0.191	4.85	46	
			0.059	1.50	0059		0.250	6.35	0.172	4.37	52	
			0.0625	1.59	0063		0.250	6.35	0.170	4.32	52	
			0.079	2.00	0079		0.250	6.35	0.170	4.32	59	
			0.096	2.44	0096		0.250	6.35	0.190	4.83	61	
			0.100	2.54	0100		0.250	6.35	0.190	4.83	62	
			0.118	3.00	0118		0.250	6.35	0.175	4.45	68	
			0.125	3.18	0125		0.250	6.35	0.190	4.83	67	
			0.197	5.00	0197		0.250	6.35	0.172	4.37	72	
			0.200	5.08	0200		0.250	6.35	0.170	4.32	65	
			0.250	6.35	0250	●	0.250	6.35	0.168	4.27	79	
			0.3125	7.94	0313		0.250	6.35	0.184	4.67	81	
			0.333	8.46	0333		0.250	6.35	0.170	4.32	82	
			0.394	10.00	0394		0.250	6.35	0.170	4.32	78	
			0.400	10.16	0400		0.250	6.35	0.170	4.32	84	
			0.500	12.70	0500	●	0.250	6.35	0.169	4.29	85	
			0.750	19.05	0750		0.250	6.35	0.170	4.32	86	
			1.000	25.40	1000	●	0.250	6.35	0.170	4.32	84	
5/16	8	031	0.057	1.44	0057		0.315	8.00	0.243	6.17	43	CMP ZBX ZBA KHD WDG NTB NTG BFW
			0.0741	1.88	0074		0.312	7.92	0.211	5.36	51	
			0.111	2.82	0111		0.312	7.92	0.232	5.89	60	
			0.167	4.24	0167		0.312	7.92	0.211	5.36	69	
			0.250	6.35	0250		0.312	7.92	0.234	5.94	76	
			0.500	12.70	0500		0.312	7.92	0.232	5.89	83	
			0.800	20.32	0800		0.306	7.77	0.243	6.17	86	

Shaded areas have been translated from their designed inch or mm dimension to an equivalent mm or inch dimension.

*Listed efficiencies are theoretical values based on Kerkote® TFE coated leadscrews

Leadscrew Size List

Diameter (inches)	Diameter (mm)	Diameter Code	Lead (inches)	Lead (mm)	LEAD CODE	Left Hand Available	Outside Diameter (for Reference) (inches)	Outside Diameter (for Reference) (mm)	Root Diameter (for Reference) (inches)	Root Diameter (for Reference) (mm)	Efficiency %*	Compatible Nut Styles
3/8	10	037	0.025	0.64	0025		0.375	9.53	0.337	8.56	21	CMP ZBX ZBA KHD WDG NTB NTG BFW
			0.039	1.00	0039		0.394	10.01	0.350	8.89	28	
			0.04167	1.06	0042		0.375	9.53	0.320	8.13	34	
			0.050	1.27	0050	●	0.375	9.53	0.301	7.65	36	
			0.055	1.40	0055		0.375	9.53	0.303	7.70	38	
			0.059	1.50	0059	●	0.389	9.88	0.313	7.95	38	
			0.0625	1.59	0063	●	0.375	9.53	0.295	7.49	41	
			0.068	1.73	0068		0.388	9.86	0.295	7.49	42	
			0.079	2.00	0079		0.375	9.53	0.264	6.71	47	
			0.0833	2.12	0083		0.375	9.53	0.293	7.44	48	
			0.100	2.54	0100	●	0.375	9.53	0.266	6.76	53	
			0.125	3.18	0125		0.375	9.53	0.295	7.49	59	
			0.157	4.00	0157		0.375	9.53	0.274	6.96	65	
			0.1667	4.23	0167		0.371	9.42	0.261	6.63	61	
			0.197	5.00	0197		0.375	9.53	0.266	6.76	69	
			0.200	5.08	0200	●	0.375	9.53	0.266	6.76	69	
			0.250	6.35	0250		0.375	9.53	0.268	6.81	70	
			0.300	7.62	0300		0.375	9.53	0.255	6.48	76	
			0.333	8.46	0333		0.375	9.53	0.245	6.22	78	
			0.363	9.22	0363	●	0.375	9.53	0.260	6.60	79	
			0.375	9.53	0375		0.375	9.53	0.265	6.73	79	
			0.394	10.00	0394		0.375	9.53	0.260	6.60	79	
			0.400	10.16	0400		0.375	9.53	0.293	7.44	79	
			0.472	12.00	0472		0.388	9.86	0.287	7.29	82	
			0.500	12.70	0500	●	0.388	9.86	0.265	6.73	81	
			0.667	16.94	0667		0.375	9.53	0.273	6.93	83	
			0.750	19.05	0750		0.388	9.86	0.273	6.93	84	
			0.984	25.00	0984		0.375	9.53	0.262	6.65	84	
			1.000	25.40	1000		0.383	9.73	0.254	6.45	84	
			1.200	30.48	1200	●	0.383	9.73	0.254	6.45	84	
			1.250	31.75	1250		0.375	9.53	0.278	7.06	84	
			1.500	38.10	1500		0.375	9.53	0.264	6.71	83	
7/16	11	043	0.050	1.27	0050		0.437	11.10	0.362	9.19	30	ZBX ZBA WDG NTB BFW
			0.0625	1.59	0063	●	0.436	11.07	0.358	9.09	38	
			0.079	2.00	0079		0.472	11.99	0.374	9.50	42	
			0.111	2.82	0111		0.437	11.10	0.327	8.31	52	
			0.118	3.00	0118		0.438	11.13	0.363	9.22	52	
			0.125	3.18	0125		0.438	11.13	0.357	9.07	54	
			0.197	5.00	0197		0.438	11.13	0.315	8.00	65	
			0.236	6.00	0236		0.433	11.00	0.313	7.95	70	
			0.250	6.35	0250		0.442	11.23	0.325	8.26	70	
			0.307	7.80	0307		0.445	11.30	0.343	8.71	73	
			0.325	8.26	0325		0.444	11.28	0.342	8.69	74	
			0.394	10.00	0394		0.446	11.33	0.331	8.41	78	
			0.463	11.76	0463		0.444	11.28	0.343	8.71	79	
			0.472	12.00	0472		0.438	11.13	0.318	8.08	80	
			0.500	12.70	0500		0.452	11.48	0.327	8.31	80	
			0.615	15.62	0615		0.475	12.07	0.376	9.55	82	

Shaded areas have been translated from their designed inch or mm dimension to an equivalent mm or inch dimension.

*Listed efficiencies are theoretical values based on Kerkote® TFE coated leadscrews

Leadscrew Size List

Diameter (inches)	Diameter (mm)	Diameter Code	Lead (inches)	Lead (mm)	LEAD CODE	Left Hand Available	Outside Diameter (for Reference) (inches)	Outside Diameter (for Reference) (mm)	Root Diameter (for Reference) (inches)	Root Diameter (for Reference) (mm)	Efficiency %*	Compatible Nut Styles
1/2	13	050	0.050	1.27	0050		0.495	12.57	0.433	11.00	29	ZBX ZBA WDG NTB BFW
			0.079	2.00	0079		0.473	12.01	0.355	9.02	41	
			0.098	2.50	0098		0.500	12.70	0.383	9.73	46	
			0.100	2.54	0100	●	0.490	12.45	0.364	9.25	46	
			0.125	3.18	0125		0.500	12.70	0.374	9.50	51	
			0.157	4.00	0157		0.500	12.70	0.384	9.75	58	
			0.160	4.06	0160		0.500	12.70	0.388	9.86	67	
			0.1667	4.23	0167		0.500	12.70	0.384	9.75	58	
			0.197	5.00	0197		0.500	12.70	0.365	9.27	62	
			0.200	5.08	0200	●	0.492	12.50	0.366	9.30	63	
			0.250	6.35	0250		0.500	12.70	0.382	9.70	67	
			0.333	8.46	0333	●	0.497	12.62	0.362	9.19	73	
			0.394	10.00	0394		0.497	12.62	0.362	9.19	76	
			0.400	10.16	0400		0.497	12.62	0.364	9.25	76	
			0.500	12.70	0500		0.488	12.40	0.352	8.94	79	
			0.630	16.00	0630		0.500	12.70	0.374	9.50	80	
			0.750	19.05	0750		0.525	13.34	0.399	10.13	83	
			0.800	20.32	0800		0.500	12.70	0.370	9.40	83	
			0.984	25.00	0984		0.500	12.70	0.369	9.37	84	
			1.000	25.40	1000	●	0.490	12.45	0.372	9.45	84	
			1.500	38.10	1500		0.490	12.45	0.374	9.50	85	
			2.000	50.80	2000		0.488	12.40	0.378	9.60	87	
5/8	16	062	0.100	2.54	0100		0.615	15.62	0.498	12.65	40	ZBX ZBA WDG NTB VHD BFW
			0.125	3.18	0125	●	0.625	15.88	0.470	11.94	45	
			0.200	5.08	0200		0.625	15.88	0.495	12.57	53	
			0.250	6.35	0250		0.625	15.88	0.469	11.91	63	
			0.315	8.00	0315		0.627	15.93	0.493	12.52	68	
			0.410	10.41	0410	●	0.625	15.88	0.481	12.22	72	
			0.500	12.70	0500	●	0.625	15.88	0.478	12.14	76	
			0.630	16.00	0630		0.625	15.88	0.491	12.47	78	
			1.000	25.40	1000		0.625	15.88	0.481	12.22	83	
			1.500	38.10	1500		0.625	15.88	0.499	12.67	85	
			1.575	40.01	1575	●	0.625	15.88	0.499	12.67	86	
			2.000	50.80	2000	●	0.625	15.88	0.499	12.67	86	

Shaded areas have been translated from their designed inch or mm dimension to an equivalent mm or inch dimension.

*Listed efficiencies are theoretical values based on Kerkote® TFE coated leadscrews

Leadscrew Size List

Diameter (inches)	Diameter (mm)	Diameter Code	Lead (inches)	Lead (mm)	LEAD CODE	Left Hand Available	Outside Diameter (for Reference) (inches)	Outside Diameter (for Reference) (mm)	Root Diameter (for Reference) (inches)	Root Diameter (for Reference) (mm)	Efficiency %*	Compatible Nut Styles
3/4	**19**	075	0.0625	1.59	**0063**		0.750	19.05	0.671	17.04	25	**ZBA NTB VHD BFW**
			0.098	2.50	**0098**		0.742	18.85	0.626	15.90	35	
			0.100	2.54	**0100**	●	0.746	18.95	0.624	15.85	35	
			0.1667	4.23	**0167**		0.727	18.47	0.645	16.38	47	
			0.197	5.00	**0197**		0.745	18.92	0.624	15.85	51	
			0.200	5.08	**0200**		0.741	18.82	0.632	16.05	52	
			0.250	6.35	**0250**		0.731	18.57	0.639	16.23	57	
			0.276	7.00	**0276**		0.750	19.05	0.624	15.85	59	
			0.333	8.46	**0333**		0.750	19.05	0.624	15.85	64	
			0.394	10.00	**0394**		0.745	18.92	0.619	15.72	68	
			0.500	12.70	**0500**		0.744	18.90	0.623	15.82	73	
			0.551	14.00	**0551**		0.750	19.05	0.624	15.85	73	
			0.591	15.00	**0591**		0.749	19.02	0.623	15.82	74	
			0.709	18.00	**0709**		0.780	19.81	0.650	16.51	77	
			0.748	19.00	**0748**		0.672	17.07	0.547	13.89	80	
			0.787	20.00	**0787**		0.780	19.81	0.648	16.46	78	
			0.800	20.32	**0800**		0.750	19.05	0.618	15.70	79	
			0.945	24.00	**0945**		0.734	18.64	0.633	16.08	80	
			1.000	25.40	**1000**	●	0.743	18.87	0.619	15.72	81	
			1.500	38.10	**1500**	●	0.712	18.08	0.590	14.99	84	
			1.969	50.00	**1969**		0.751	19.08	0.620	15.75	84	
			2.000	50.80	**2000**	●	0.742	18.85	0.611	15.52	84	
			2.400	60.96	**2400**	●	0.750	19.05	0.620	15.75	84	
			3.622	92.00	**3622**	●	0.750	19.05	0.634	16.10	87	
7/8	**22**	087	0.200	5.08	**0200**	●	0.870	22.10	0.742	18.85	48	**ZBA NTB VHD BFW**
			0.236	6.00	**0236**		0.848	21.54	0.773	19.63	52	
			0.250	6.35	**0250**		0.875	22.23	0.749	19.02	53	
			0.394	10.00	**0394**		0.875	22.23	0.741	18.82	65	
			0.500	12.70	**0500**		0.862	21.89	0.744	18.90	69	
			0.630	16.00	**0630**		0.875	22.23	0.741	18.82	73	
			0.667	16.94	**0667**		0.871	22.12	0.745	18.92	74	
			0.787	20.00	**0787**		0.875	22.23	0.741	18.82	78	
			0.945	24.00	**0945**		0.875	22.23	0.741	18.82	79	
			1.000	25.40	**1000**		0.871	22.12	0.742	18.85	80	
15/16	**24**	093	0.050	1.27	**0050**	LH Only	0.938	23.83	0.874	22.20	17	**ZBA NTB BFW**
			2.000	50.80	**2000**		0.927	23.55	0.815	20.70	85	
			3.000	76.20	**3000**	●	0.939	23.85	0.803	20.40	86	

Shaded areas have been translated from their designed inch or mm dimension to an equivalent mm or inch dimension.

*Listed efficiencies are theoretical values based on Kerkote® TFE coated leadscrews

Anti-Backlash: Self-Compensating, Zero Backlash

CMP Series
– Light Loads, Compact Design
Exceptionally compact self-lubricating acetal nut; ideally suited for applications using oil or grease.

ZBX Series
– Light Loads
Patented self-lubricating polyacetal nut; precise positional accuracy and repeatability at a low cost.

WDG Series
– Moderate Loads
An exceptionally compact design to provide stiffness and balanced accuracy for precise positioning. A self-lubricating acetal nut, axially preloaded, the patented wedge design locks the nut at the correct preload without excessive drag.

KHD Series
– Moderate Loads, Low Drag Torque
For moderate load applications; delivers increased load capacity and greater axial stiffness with low drag torque.

NTB Series
– Full Range, Flexible Design
Self-compensating nut assembly maintains axial stiffness throughout its life with minimum system drag torque. Easily modified for custom applications.

VHD Series
– Heavy Loads, High Axial Stiffness
Delivers maximum load carrying capability, with highest axial and radial stiffness.

Anti-Backlash: Special Purpose

ZBA Series
– Adjustable Drag Torque/Ultra Smooth Travel
Unique patented self-lubricating polyacetal nut can be adjusted for torque ranges.

NTG Series
– Adjustable Drag Torque/Compact Size
Compact anti-backlash assembly allows drag torque to be pre-set according to system requirements.

Nuts: General Purpose

BFW Series
– For applications that do not require anti-backlash or wear compensation
Long life at minimal cost.

Nuts: Miniature

MINI Series
– Revolutionary miniature designs
For applications previously off limits to lead screw technology. Available in NTB and NTG anti-backlash and BFW style general purpose configurations.

Nuts: Custom

Custom
– Haydon Kerk Motion Solutions™ can work with you to design custom nuts in a variety of materials specifically for your application.

Nut Feature Matrix

Haydon Kerk Motion Solutions, Inc. has a wide variety of standard nut designs which offer many features to choose from. Once an application's most important requirements are understood, it becomes a matter of choosing the nut which best meets those requirements. Occasionally, more than one nut might do the job, but in the vast majority of situations, one nut design will stand above the rest. The matrix below may help to narrow down the choices.

All Kerk® nuts can be modified to some degree to help them better meet specific requirements. Haydon Kerk Motion Solutions is also very willing to discuss custom nut designs where requirements and volumes justify.

Nut Feature / Nut Style:	CMP	ZBX	ZBA	KHD	WDG	NTB	NTG	VHD	BFW
Compactness	★★★	★★	★★	★★	★★★	★★	★★★	★	★★★
Dynamic Load Capability	★★	★	★★	★★	★★	★★	★★	★★★	★★★
Minimal Drag Torque	★	★★	★★	★★★	★★	★★	★★	★★★	N/A
Vibration Damping (horizontal)	★	★★★	★★★	★★	★	★	★★	★★	N/A
Vibration Damping (vertical)	★	★★★	★★★	★	★	★	★	★	N/A
Smoothness of Operation (printing, scanning)	★	★★	★★★	★★	★★	★★	★★★	★★	★
Backlash/Wear Compensation Capability	★★★	★★	★	★★★	★★★	★★★	★	★★★	N/A
Ease of User Adjustment of Drag Torque/Backlash	N/A	N/A	★★★	★★	N/A	★	★★★	★★	N/A
Stiffness (less axial bi-directlional compliance)	★★	★★	★★	★★★	★★★	★★★	★★	★★★	N/A
Ability to Add Modifications	★	★★	★	★	★	★★★	★	★	★★★
Ability to manufacture with Custom Material	★	★★	★★	★	★	★★★	★★	★	★★★
Ability to Work with Finer Leads (<0.2-in)	★★★	★★★	★★★	★★★	★★★	★★	★★★	★★★	★★★
Ability to Work with Long Leads (>1-in)	★★★	★★★	★★★	★★★	★★★	★★★	★	★★★	★★★

GOOD ★ BETTER ★★ BEST ★★★

Comparison of Kerk® Nut Characteristics

Nominal Screw Diameter	Property	Nut Style Series								
		CMP	ZBX	ZBA	KHD	WDG	NTB	NTG	VHD	BFW
1/8-in (3mm)	Dynamic Load						5 lbs. (2.3 kg)	5 lbs. (2.3 kg)		25 lbs. (11 kg)
	Static Frictional Drag Torque						.1-.5 oz.-in. (.001-.004 NM)	.1-.5 oz.-in. (.001-.004 NM)		Free Wheeling
3/16-in (4mm)	Dynamic Load	5 lbs. (2.3 kg)				10 lbs. (4.5 kg)	5 lbs. (2.3 kg)	5 lbs. (2.3 kg)		25 lbs. (11 kg)
	Static Frictional Drag Torque	4 oz.-in. (.03 NM)				4 oz.-in. max. (.03 NM max.)	.1-.5 oz.-in. (.001-.004 NM)	.1-.5 oz.-in. (.001-.004 NM)		Free Wheeling
1/4-in (6mm)	Dynamic Load	5 lbs. (2.3 kg)	5 lbs. (2.3 kg)	5 lbs. (2.3 kg)		10 lbs. (4.5 kg)	10 lbs. (4.6 kg)	10 lbs. (4.6 kg)		50 lbs. (20 kg)
	Static Frictional Drag Torque	4 oz.-in. (.03 NM)	.5-3 oz.-in. (.004-.02 NM)	.5-2 oz.-in. (.004-.014 NM)		4 oz.-in. max. (.03 NM max.)	.5-2 oz.-in. (.004-.014 NM)	.5-2 oz.-in. (.004-.014 NM)		Free Wheeling
5/16-in (8mm)	Dynamic Load	8 lbs. (3.6 kg)	10 lbs. (5 kg)	10 lbs. (5 kg)	20 lbs. (10 kg)	25 lbs. (11.3 kg)	20 lbs. (10 kg)	20 lbs. (10 kg)		75 lbs. (35 kg)
	Static Frictional Drag Torque	5 oz.-in. (.04 NM)	1-5 oz.-in. (.01-.03 NM)	1-3 oz.-in. (.01-.02 NM)	1-3 oz.-in. (.01-.02 NM)	5 oz.-in. max. (.04 NM max)	1-3 oz.-in. (.01-.02 NM)	1-3 oz.-in. (.007-.02 NM)		Free Wheeling
3/8-in (10mm)	Dynamic Load	8 lbs. (3.6 kg)	10 lbs. (5kg)	10 lbs. (5 kg)	20 lbs. (10 kg)	25 lbs. (11.3 kg)	20 lbs. (10 kg)	20 lbs. (10 kg)		75 lbs. (35 kg)
	Static Frictional Drag Torque	5 oz.-in. (.04 NM)	1-5 oz.-in. (.01-.03 NM)	1-3 oz.-in. (.01-.02 NM)	1-3 oz.-in. (.01-.02 NM)	5 oz.-in. max. (.04 NM max)	1-3 oz.-in. (.01-.02 NM)	1-3 oz.-in. (.007-.02 NM)		Free Wheeling
7/16-in (11mm)	Dynamic Load		15 lbs. (7 kg)	15 lbs. (7 kg)		75 lbs. (34 kg)	30 lbs. (13 kg)			90 lbs. (40 kg)
	Static Frictional Drag Torque		2-6 oz.-in. (.014-.04 NM)	2-5 oz.-in. (.014-.03 NM)		9 oz.-in. max. (.06 NM max)	1-3 oz.-in. (.007-.02 NM)			Free Wheeling
1/2-in (13mm)	Dynamic Load		25 lbs. (11 kg)	25 lbs. (11 kg)		75 lbs. (34 kg)	100 lbs. (45 kg)		150 lbs. (68 kg)	150 lbs. (68 kg)
	Static Frictional Drag Torque		3-7 oz.-in. (.02-.05 NM)	2-5 oz.-in. (.014-.03 NM)		9 oz.-in. max. (.06 NM max)	2-6 oz.-in. (.014-.04 NM)		2-6 oz.-in. (.014-.04 NM)	Free Wheeling
5/8-in (16mm)	Dynamic Load		35 lbs. (16 kg)	35 lbs. (16 kg)			125 lbs. (56 kg)		250 lbs. (113 kg)	225 lbs. (100 kg)
	Static Frictional Drag Torque		4-8 oz.-in. (.03-.055 NM)	3-7 oz.-in. (.02-.05 NM)			2-6 oz.-in. (.014-.04 NM)		2-6 oz.-in. (.014-.04 NM)	Free Wheeling
3/4-in (19mm)	Dynamic Load			55 lbs. (25 kg)			150 lbs. (68 kg)		350 lbs. (159 kg)	350 lbs. (160 kg)
	Static Frictional Drag Torque			5-9 oz.-in. (.03-.063 NM)			3-7 oz.-in. (.02-.05 NM)		3-7 oz.-in. (.02-.05 NM)	Free Wheeling
7/8-in (22mm)	Dynamic Load			55 lbs. (25 kg)			200 lbs. (90 kg)		350 lbs. (159 kg)	500 lbs (227 kg)
	Static Frictional Drag Torque			5-9 oz.-in. (.03-.063 NM)			4-8 oz.-in. (.03-.06 NM)		3-7 oz.-in. (.02-.05 NM)	Free Wheeling
15/16-in (24mm)	Dynamic Load			55 lbs. (25 kg)			200 lbs. (90 kg)			500 lbs. (227 kg)
	Static Frictional Drag Torque			5-9 oz.-in. (.03-.063 NM)			4-8 oz.-in. (.03-.06 NM)			Free Wheeling

CMP Series – *for light loads, compact design*

The Kerk® CMP Series anti-backlash assembly utilizes a general purpose self-compensating nut in an exceptionally compact package. This allows equipment designers to utilize smaller assemblies without sacrificing stroke length. The CMP anti-backlash nut design is also ideally suited for applications using grease or oil.

The standard CMP Series assembly utilizes a self-lubricating acetal nut, axially preloaded, on a 303 stainless steel screw. End machining of screw to customer specifications and Kerkote® or Black Ice™ TFE screw coating are optional. Various axial compression springs are also available, depending on application requirements. Please consult factory for details.

CMP Series	Screw Diam. A inch (mm)	Nut Diam. B inch (mm)	Nut Length C inch (mm)	Flange Diam. D inch (mm)	Flange Thickness E inch (mm)	Mounting Hole Diam. F inch (mm)	Bolt Circle Diam. G inch (mm)	Hub Length H inch (mm)	Hub Diam. J inch (mm)	Dynamic Load lbs (Kg)	Drag Torque (max.) oz-in (NM)
CMP Flange Mount	3/16 (4)	0.625 (16)	1.05 (26.6)	1.125 (28.6)	0.160 (4.1)	0.143 (3.7)	0.875 (22.2)	0.80 (2.04)	0.625 (15.9)	5 (2.3)	4 (.03)
	7/32 (5)	0.625 (16)	1.05 (26.6)	1.125 (28.6)	0.160 (4.1)	0.143 (3.7)	0.875 (22.2)	0.80 (2.04)	0.625 (15.9)	5 (2.3)	4 (.03)
	1/4 (6)	0.625 (16)	1.05 (26.6)	1.125 (28.6)	0.160 (4.1)	0.143 (3.7)	0.875 (22.2)	0.80 (2.04)	0.625 (15.9)	5 (2.3)	4 (.03)
	5/16 (8)	0.750 (19)	1.32 (33.5)	1.5 (38.1)	0.200 (5.08)	0.200(5.08)	1.125 (28.6)	0.120 (3.05)	0.750 (19.1)	8 (3.6)	5 (.04)
	3/8 (10)	0.750 (19)	1.32 (33.5)	1.5 (38.1)	0.200 (5.08)	0.200(5.08)	1.125 (28.6)	0.120 (3.05)	0.750 (19.1)	8 (3.6)	5 (.04)

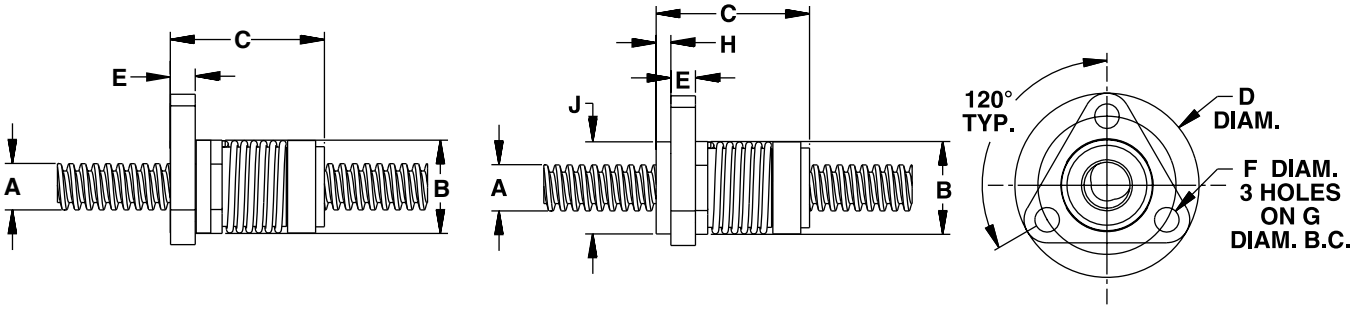

CMP Series	Screw Diam. A inch (mm)	Nut Diam. B inch (mm)	Nut Length C inch (mm)	Thread M*	Thread Length N inch (mm)	Dynamic Load lbs (Kg)	Drag Torque (max.) oz-in (NM)
CMP Thread Mount	3/16 (4)	0.625 (16)	1.05 (26.6)	9/16 - 18	0.240 (6.1)	5 (2.3)	4 (.03)
	7/32 (5)	0.625 (16)	1.05 (26.6)	9/16 - 18	0.240 (6.1)	5 (2.3)	4 (.03)
	1/4 (6)	0.625 (16)	1.05 (26.6)	9/16 - 18	0.240 (6.1)	5 (2.3)	4 (.03)
	5/16 (8)	0.750 (19)	1.32 (33.5)	5/8 - 18	0.320 (8.1)	8 (3.6)	5 (.04)
	3/8 (10)	0.750 (19)	1.32 (33.5)	5/8 - 18	0.320 (8.1)	8 (3.6)	5 (.04)

* metric available as required

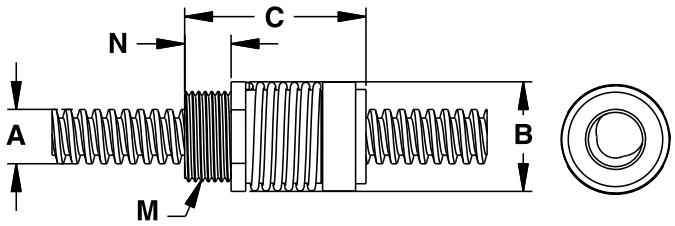

Haydon Kerk Motion Solutions, Inc. • www.HaydonKerk.com • Phone: 800.243.2715 • International: 203.756.7441

ZBX Series *– for lighter loads*

The patented Kerk® ZBX Series anti-backlash assembly offers an effective linear actuator for design operations requiring precise positional accuracy and repeatability, with minimum cost.

The standard ZBX unit utilizes a patented self-lubricating polyacetal nut radially preloaded on a 303 stainless steel screw.

The ZBX assembly, through its unique transfer of loads, offers exceptional torque consistency and repeatability when traversing in either direction. The inherent damping qualities of the ZBX design make it ideally suited for vertical applications requiring noise or vibration control.

End machining to customer specifications and Kerkote® TFE screw coating are optional, as are designs for special operating configurations or environments.

ZBX Series: Flange Mount

	Screw Diam. A inch (mm)	Nut Diam. B inch (mm)	Nut Length C inch (mm)	Flange Diam. D inch (mm)	Flange Thickness E inch (mm)	Mounting Hole Diam. F inch (mm)	Bolt Circle Diam. G inch (mm)	Dynamic Load lbs (Kg)	Drag Torque oz-in (NM)
ZBX Series Flange Mount	1/4 (6)	.50 (12.7)	1.0 (26)	1.0 (25.4)	.18 (4.6)	.140 (3.6)	.750 (19.1)	5 (2.3)	.5-3 (.004-.02)
	5/16 (8)	.70 (17.8)	1.9 (48)	1.5 (38.1)	.18 (4.6)	.200 (5.08)	1.125 (28.6)	10 (5)	1-5 (.007-.03)
	3/8 (10)	.70 (17.8)	1.9 (48)	1.5 (38.1)	.18 (4.6)	.200 (5.08)	1.125 (28.6)	10 (5)	1-5 (.007-.03)
	7/16 (11)	.80 (20.3)	1.9 (48)	1.5 (38.1)	.18 (4.6)	.200 (5.08)	1.125 (28.6)	15 (7)	2-6 (.014-.04)
	1/2 (13)	.89 (22.6)	2.0 (51)	1.62 (41.2)	.26 (6.6)	.200 (5.08)	1.1250 (31.8)	25 (11)	3-7 (.02-.05)
	5/8 (16)	1.06 (26.9)	2.0 (51)	1.75 (44.5)	.26 (6.6)	.200 (5.08)	1.375 (34.9)	35 (16)	4-8 (.028-.055)

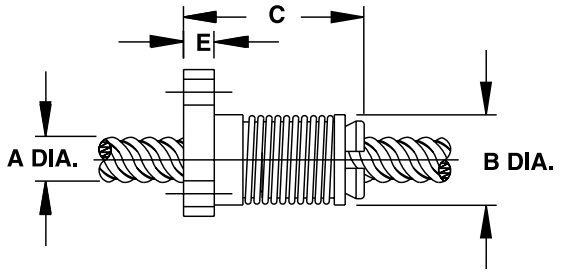

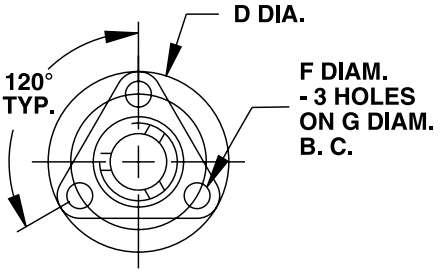

ZBX Series: Thread Mount

	Screw Diam. A inch (mm)	Nut Diam. B inch (mm)	Nut Length C inch (mm)	Flange Diam. D inch (mm)	Flange Thickness E inch (mm)	Thread M* inch	Thread Length N inch (mm)	Dynamic Load lbs (Kg)	Drag Torque oz-in (NM)
ZBX Series Thread Mount	1/4 (6)	.50 (12.7)	1.3 (33)	.80 (20.3)	.22 (5.6)	5/8 - 18	.16 (4.1)	5 (2.3)	.5-3 (.004-.02)
	5/16 (8)	.70 (17.8)	2.2 (56)	1.00 (25.4)	.17 (4.3)	5/8 - 18	3.8 (9.7)	10 (5)	1-5 (.007-.03)
	3/8 (10)	.70 (17.8)	2.2 (56)	1.00 (25.4)	.17 (4.3)	5/8 - 18	.38 (9.7)	10 (5)	1-5 (.007-.03)
	7/16 (11)	.80 (20.3)	2.3 (59)	1.00 (25.4)	.12 (3.1)	15/16 - 16	.38 (9.7)	15 (7)	2-6 (.014-.04)
	1/2 (13)	.89 (22.6)	2.3 (59)	1.02 (25.9)	.12 (3.1)	15/16 - 16	.38 (9.7)	25 (11)	3-7 (.02-.05)
	5/8 (16)	1.06 (26.9)	2.4 (61)	1.06 (26.9)	.15 (3.8)	15/16 - 16	.50 (12.7)	35 (16)	4-8 (.028-.055)

* metric available as required

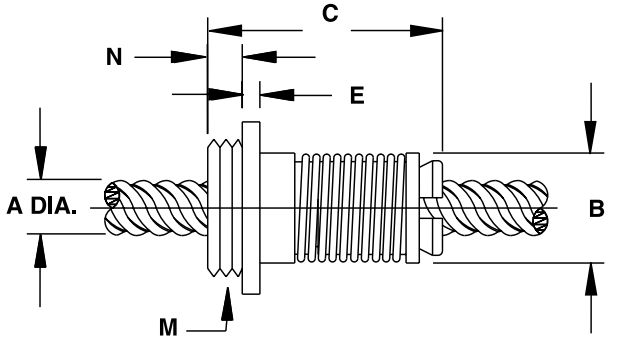

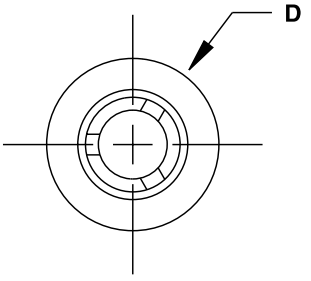

KHD Series – for moderate loads, low drag torque

The Kerk® KHD Series anti-backlash assembly makes use of the Kerk patented AXIAL TAKE-UP MECHANISM (see *Leadscrew Assemblies: Anti-Backlash Technologies* section) to provide backlash compensation. The unique split nut with torsional take-up provides increased load capacity and axial stiffness over comparably sized ZBX units.

Although the KHD offers high axial stiffness, frictional drag torque (1-3 oz.-in.) is very low. The anti-backlash mechanism in the KHD unit eliminates the need for load compensating preload forces.

The assembly consists of a 303 stainless steel screw mated with a self-lubricating polyacetal nut. End machining to customer specifications and Kerkote® TFE screw coating are optional.

KHD Series: Flange Mount

	Screw Diam. A inch (mm)	Nut Diam. B inch (mm)	Nut Length C inch (mm)	Flange Diam. D inch (mm)	Flange Thickness E inch (mm)	Mounting Hole Diam. F inch (mm)	Bolt Circle Diam. G inch (mm)	Dynamic Load lbs (Kg)	Drag Torque oz-in (NM)
KHD Series Flange Mount	5/16 (8)	.80 (20.3)	2.0 (50.8)	1.50 (38.1)	.19 (4.8)	.200 (5.08)	1.125 (28.58)	20 (10)	1-3 (.007-.020)
	3/8 (10)	.80 (20.3)	2.0 (50.8)	1.50 (38.1)	.19 (4.8)	.200 (5.08)	1.125 (28.58)	20 (10)	1-3 (.007-.020)

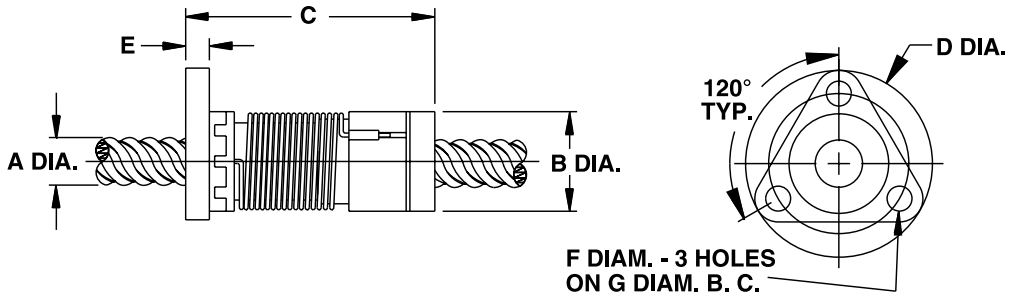

KHD Series: Thread Mount

	Screw Diam. A inch (mm)	Nut Diam. B inch (mm)	Nut Length C inch (mm)	Flange Diam. D inch (mm)	Flange Thickness E inch (mm)	Thread M* inch	Thread Length N inch (mm)	Dynamic Load lbs (Kg)	Drag Torque oz-in (NM)
KHD Series Thread Mount	5/16 (8)	.80 (20.3)	2.2 (55.9)	.75 (19.1)	.05 (1.27)	3/4-20	.35 (8.9)	20 (10)	1-3 (.007-.020)
	3/8 (10)	.80 (20.3)	2.2 (55.9)	.75 (19.1)	.05 (1.27)	3/4-20	.35 (8.9)	20 (10)	1-3 (.007-.020)

* metric available as required

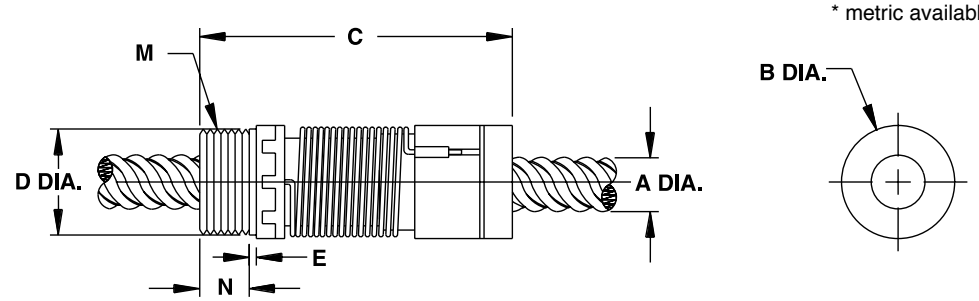

WDG Series – *for moderate loads, compact designs*

The Kerk® WDG Series anti-backlash assembly utilizes an exceptionally compact design to provide stiffness and balanced accuracy for precise positioning. The patented wedge design locks the nut at the correct preload without excessive drag.

Shorter than other self-compensating nuts with similar performance, the W nut permits the design of smaller assemblies without sacrificing stroke length. Nut wear or momentary overload is accommodated through the WDG Series' compensation mechanism, which maintains positional accuracy in demanding applications.

The standard W Series assembly utilizes a self-lubricating acetal nut, axially preloaded, on a 303 stainless steel screw. End machining to customer specifications and Kerkote® or Black Ice™ TFE screw coating are optional, as are designs for special operating configurations or environments.

WDG Series	Screw Diam. A inch (mm)	Nut Diam. B inch (mm)	Nut Length C inch (mm)	Flange Diam. D inch (mm)	Flange Thickness E inch (mm)	Mounting Hole Diam. F inch (mm)	Bolt Circle Diam. G inch (mm)	Hub Length H inch (mm)	Hub Diam. J inch (mm)	Dynamic Load lbs (Kg)	Drag Torque (max.) oz-in (NM)
WDG Flange Mount	3/16 (4)	0.625 (16)	1.05 (26.6)	1.125 (28.6)	0.160 (4.1)	0.143 (3.7)	0.875 (22.2)	0.80 (2.04)	0.625 (15.9)	10 (4.5)	4 (.03)
	7/32 (5)	0.625 (16)	1.05 (26.6)	1.125 (28.6)	0.160 (4.1)	0.143 (3.7)	0.875 (22.2)	0.80 (2.04)	0.625 (15.9)	10 (4.5)	4 (.03)
	1/4 (6)	0.625 (16)	1.05 (26.6)	1.125 (28.6)	0.160 (4.1)	0.143 (3.7)	0.875 (22.2)	0.80 (2.04)	0.625 (15.9)	10 (4.5)	4 (.03)
	5/16 (8)	0.750 (19)	1.32 (33.5)	1.5 (38.1)	0.200 (5.08)	0.200(5.08)	1.125 (28.6)	0.120 (3.05)	0.750 (19.1)	25 (11.3)	5 (.04)
	3/8 (10)	0.750 (19)	1.32 (33.5)	1.5 (38.1)	0.200 (5.08)	0.200(5.08)	1.125 (28.6)	0.120 (3.05)	0.750 (19.1)	25 (11.3)	5 (.04)
	7/16 (11)	1.00 (25.4)	2.078 (52.8)	1.750 (44.5)	0.250 (6.35)	0.220 (5.6)	1.406 (35.7)	0.255 (6.48)	1.000 (25.4)	75 (34)	9 (.06)
	1/2 (13)	1.00 (25.4)	2.078 (52.8)	1.750 (44.5)	0.250 (6.35)	0.220 (5.6)	1.406 (35.7)	0.255 (6.48)	1.000 (25.4)	75 (34)	9 (.06)

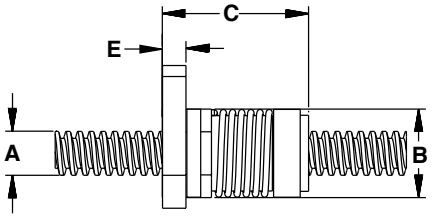

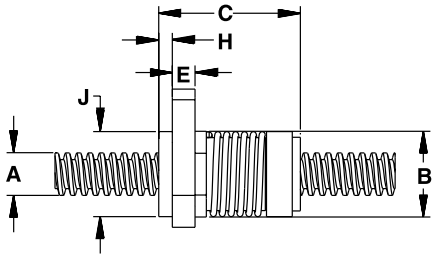

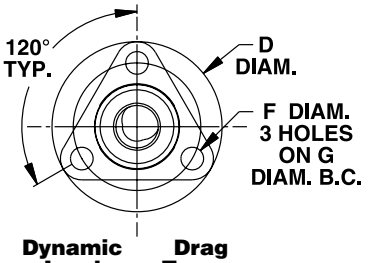

WDG Series	Screw Diam. A inch (mm)	Nut Diam. B inch (mm)	Nut Length C inch (mm)	Thread M*	Thread Length N inch (mm)	Dynamic Load lbs (Kg)	Drag Torque (max.) oz-in (NM)
WDG Thread Mount	3/16 (4)	0.625 (16)	1.05 (26.6)	9/16 - 18	0.240 (6.1)	10 (4.5)	4 (.03)
	7/32 (5)	0.625 (16)	1.05 (26.6)	9/16 - 18	0.240 (6.1)	10 (4.5)	4 (.03)
	1/4 (6)	0.625 (16)	1.05 (26.6)	9/16 - 18	0.240 (6.1)	10 (4.5)	4 (.03)
	5/16 (8)	0.750 (19)	1.32 (33.5)	5/8 - 18	0.320 (8.1)	25 (11.3)	5 (.04)
	3/8 (10)	0.750 (19)	1.32 (33.5)	5/8 - 18	0.320 (8.1)	25 (11.3)	5 (.04)
	7/16 (11)	1.00 (25.4)	2.078 (52.8)	15/16 - 16	0.500 (12.7)	75 (34)	9 (.06)
	1/2 (13)	1.00 (25.4)	2.078 (52.8)	15/16 - 16	0.500 (12.7)	75 (34)	9 (.06)

* metric available as required

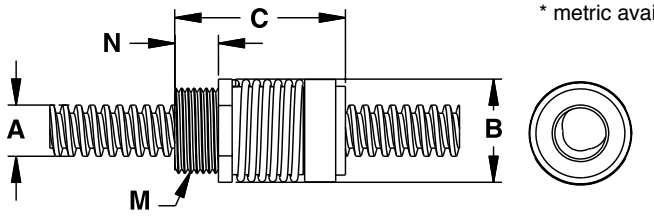

Haydon Kerk Motion Solutions, Inc. • www.HaydonKerk.com • Phone: 800.243.2715 • International: 203.756.7441

NTB Series – full range, flexible designs

The Kerk® NTB Series anti-backlash assembly is designed for higher load applications than the ZBX or KHD series units. Using the patented take up mechanism, it maintains axial stiffness throughout its life while system torque is held to a minimum. The need to highly pre-load the nut to compensate for load has been eliminated with the Kerk NTB Series assembly.

The nut is manufactured with a self-lubricating polyacetal designed to run efficiently on the precision rolled shafting. Screws are 303 stainless and are available with the proprietary long - life Kerkote® TFE coating. The NTB's simple, compact design can be easily modified for custom applications.

The NTB assembly provides low drag torque, high system stiffness, smooth operation, and long life throughout its load and speed range.

NTB Series: Flange Mount

	Screw Diam. A inch (mm)	Nut Diam. B inch (mm)	Nut Length C inch (mm)	Flange Diam. D inch (mm)	Flange Thickness E inch (mm)	Mounting Hole Diam. F inch (mm)	Bolt Circle Diam. G inch (mm)	Hub Width H inch (mm)	Hub Diam. J inch (mm)	Dynamic Load lbs (Kg)	Drag Torque oz-in (NM)
NTB Triangular Flange	1/4 (6)	.52 (13.2)	1.1 (28)	1.00 (25.4)	.16 (4.0)	.143 (3.63)	.750 (19.1)	.08 (2.0)	.500 (12.7)	10 (4.5)	.5-2 (.004-.014)
	5/16 (8)	.80 (20.3)	1.8 (46)	1.50 (38.1)	.20 (5.1)	.200 (5.08)	1.125 (28.6)	.10 (2.54)	.750 (19.1)	20 (9.1)	1-3 (.007-.02)
	3/8 (10)	.80 (20.3)	1.8 (46)	1.50 (38.1)	.20 (5.1)	.200 (5.08)	1.125 (28.6)	.10 (2.54)	.750 (19.1)	20 (9.1)	1-3 (.007-.02)
	7/16 (11)	.90 (22.9)	1.8 (46)	1.62 (41.2)	.23 (5.7)	.200 (5.08)	1.1250 (31.8)	.10 (2.54)	.875 (22.2)	30 (13.6)	1-3 (.007-.02)
NTB Round Flange	1/2 (13)	1.06 (26.9)	2.1 (54)	1.75 (44.5)	.25 (6.4)	.220 (5.59)	1.406 (35.71)	.12 (3.0)	1.00 (25.4)	100 (45.5)	2-6 (.014-.04)
	5/8 (16)	1.38 (34.9)	2.3 (59)	2.13 (54.1)	.28 (7.0)	.220 (5.59)	1.750 (44.45)	.10 (2.54)	1.25 (31.8)	125 (56.8)	2-6 (.014-.04)
	3/4 (19)	1.56 (39.6)	2.7 (67)	2.38 (60.5)	.31 (7.9)	.220 (5.59)	2.000 (50.80)	.10 (2.54)	1.50 (38.1)	150 (68.2)	3-7 (.02-.05)
	7/8 (22)	1.75 (44.5)	2.8 (70)	2.63 (66.8)	.38 (9.5)	.220 (5.59)	2.250 (57.15)	.12 (3.0)	1.75 (44.5)	200 (90.9)	4-8 (.03-.06)
	15/16 (24)	1.75 (44.5)	2.8 (70)	2.63 (66.8)	.38 (9.5)	.220 (5.59)	2.250 (57.15)	.12 (3.0)	1.75 (44.5)	200 (90.9)	4-8 (.03-.06)

NTB MINI Series – *see MINI Series Products*

Triangular Flange

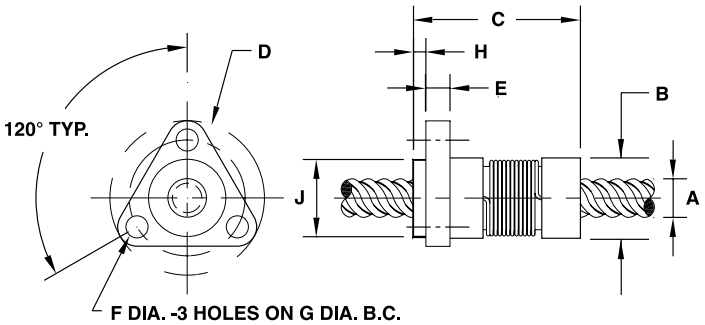

Round Flange

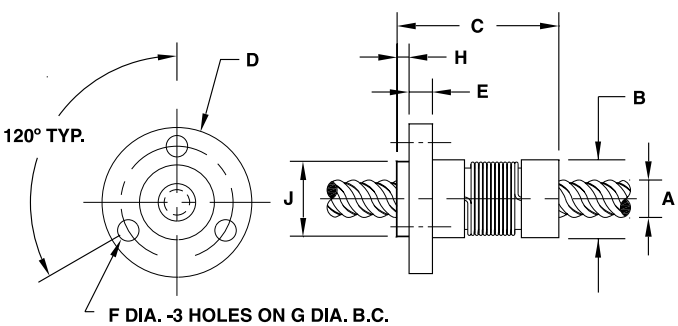

NTB Series: Thread Mount

	Screw Diam. A inch (mm)	Nut Diam. B inch (mm)	Nut Length C inch (mm)	Thread M* inch (mm)	Thread Length N inch (mm)	Dynamic Load lbs (Kg)	Drag Torque oz-in (NM)
NTB Thread Mount 1/4 to 7/16-in	1/4 (6)	.52 (13.2)	1.1 (28)	7/16-20	.25 (6.4)	10 (4.5)	.5-2 (.004-.014)
	5/16 (8)	.80 (20.3)	1.8 (45)	3/4-20	.38 (9.5)	20 (9.1)	1-3 (.007 -.02)
	3/8 (10)	.80 (20.3)	1.8 (45)	3/4-20	.38 (9.5)	20 (9.1)	1-3 (.007 -.02)
	7/16 (11)	.90 (22.9)	1.8 (46)	13/16-16	.38 (9.5)	30 (13.6)	1-3 (.007 -.02)
NTB Thread Mount 1/2 to 15/16-in	1/2 (13)	1.06 (26.9)	2.1 (54)	15/16-16	.38 (9.5)	100 (45.5)	2-6 (.014-.04)
	5/8 (16)	1.38 (34.9)	2.3 (59)	1 1/8-16	.38 (9.5)	125 (56.8)	2-6 (.014-.04)
	3/4 (19)	1.56 (39.6)	2.7 (67)	1 3/8-16	.50 (12.7)	150 (68.2)	3-7 (.02-.05)
	7/8 (22)	1.75 (44.5)	2.8 (70)	1 9/16-16	.50 (12.7)	200 (90.9)	4-8 (.03-.06)
	15/16 (24)	1.75 (44.5)	2.8 (70)	1 9/16-16	.50 (12.7)	200 (90.9)	4-8 (.03-.06)

NTB MINI Series – *see MINI Series Products*

* metric available as required

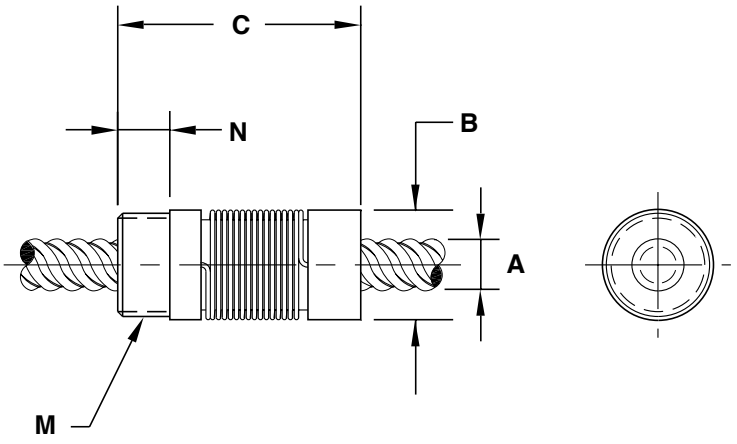

The Kerk® VHD Series anti-backlash assembly provides the maximum load carrying capability and the highest axial and radial stiffness of any Kerk nut assembly. Designed for smooth, quiet operation and long life, the VHD assembly provides low drag torque by making use of the patented Kerk AXIAL TAKE-UP MECHANISM (see *Leadscrew Assemblies: Anti-Backlash Technologies* section). Drag and wear associated with high pre-load forces are eliminated with the VHD Series. Screws are 303 stainless steel with Kerk's custom Kerkote® TFE extended life coating optional.

Assemblies are available cut-to-length or with screws machined to your requirements.

VHD Series: Flange Mount

	Screw Diam. A inch (mm)	Nut Diam. B inch (mm)	Nut Length C inch (mm)	Flange Diam. D inch (mm)	Flange Thickness E inch (mm)	Mounting Hole Diam. F inch (mm)	Bolt Circle Diam. G inch (mm)	Hub Width H inch (mm)	Hub Diam. J inch (mm)	Dynamic Load lbs (Kg)	Drag Torque oz-in (NM)
VHD Flange Mount	1/2 (13)	1.12 (28.5)	2.3 (59)	1.75 (44.5)	.23 (5.9)	.22 (5.60)	1.406 (35.71)	.12 (3.1)	.93 (23.62)	150 (68)	2-6 (.014-.02)
	5/8 (16)	1.38 (35.1)	2.6 (66)	2.08 (53)	.28 (7.1)	.22 (5.60)	1.750 (44.45)	N/A	N/A	250 (113)	2-6 (.014-.02)
	3/4 (19)	1.62 (41.2)	2.8 (71)	2.38 (60.5)	.31 (7.9)	.22 (5.60)	2.000 (50.80)	N/A	N/A	350 (159)	3-7 (.02-.05)
	7/8 (22)	1.62 (41.2)	2.8 (71)	2.38 (60.5)	.31 (7.9)	.22 (5.60)	2.000 (50.80)	N/A	N/A	350 (159)	3-7 (.02-.05)

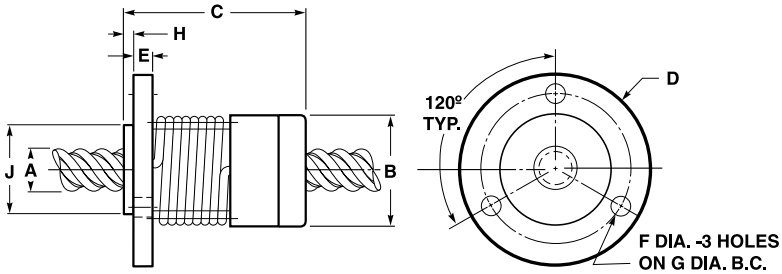

VHD Series: Thread Mount

	Screw Diam. A inch (mm)	Nut Diam. B inch (mm)	Nut Length C inch (mm)	Thread M* inch (mm)	Thread Length N inch (mm)	Dynamic Load lbs (Kg)	Drag Torque oz-in (NM)
WDG Thread Mount	1/2 (13)	1.12 (28.5)	2.5 (64)	15/16-16	.50 (12.7)	150 (68)	2-6 (.014-.04)
	5/8 (16)	1.38 (35.1)	2.8 (72)	1 1/4-16	.50 (12.7)	250 (113)	2-6 (.014-.04)
	3/4 (19)	1.62 (41.2)	3.12 (79)	1 3/8-16	.50 (12.7)	350 (159)	3-7 (.02-.05)
	7/8 (22)	1.62 (41.2)	3.12 (79)	1 3/8-16	.50 (12.7)	350 (159)	3-7 (.02-.05)

* metric available as required

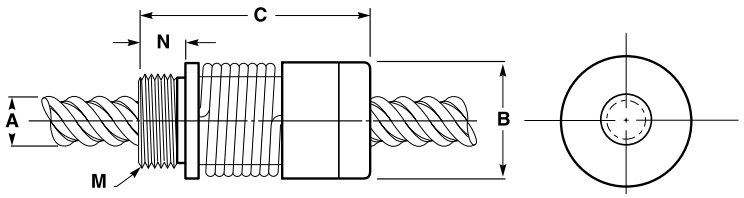

ZBA Series – *adjusable drag torque/ultra smooth travel*

The patented Kerk® ZBA Series offers a cost effective anti-backlash assembly for applications requiring precise positional accuracy and repeatability. The ZBA has been developed specifically for those applications that require very smooth and consistent motion such as printing, scanning, and coordinate measurement systems.

An added benefit of the ZBA design is the ability to manually adjust the drag torque setting to match the specific requirements of the application. This drag torque can also be set at the factory to meet individual customer specifications. The inherent damping qualities of the ZBA design make it ideally suited for applications requiring noise or vibration control.

The standard ZBA unit utilizes a self-lubricating polyacetal nut radially preloaded on a 303 stainless steel screw. End machining to customer specifications and Kerkote® TFE screw coating are optional.

ZBA Series: Flange Mount

	Screw Diam. A inch (mm)	Nut Diam. B inch (mm)	Nut Length C inch (mm)	Flange Diam. D inch (mm)	Flange Thickness E inch (mm)	Mounting Hole Diam. F inch (mm)	Bolt Circle Diam. G inch (mm)	Dynamic Load lbs (Kg)	Drag Torque oz-in (NM)
ZBA Flange Mount	1/4 (6)	.53 (13.5)	1.00 (25.4)	1.00 (25.4)	.18 (4.6)	.143 (3.6)	.750 (19.05)	5 (2.3)	.5-2 (.004-.014)
	5/16 (8)	.74 (18.8)	1.9 (48)	1.50 (38.1)	.18 (4.6)	.200 (5.08)	1.125 (28.58)	10 (5)	1-3 (.007-.02)
	3/8 (9)	.74 (18.8)	1.9 (48)	1.50 (38.1)	.18 (4.6)	.200 (5.08)	1.125 (28.58)	10 (5)	1-3 (.007-.02)
	7/16 (11)	.80 (20.3)	1.9 (48)	1.50 38.1)	.18 (4.6)	.200 (5.08)	1.125 (28.58)	15 (7)	2-5 (.014-.03)
	1/2 (13)	.89 (22.6)	2.00 (50.8)	1.62 (41.2)	.28 (7.1)	.200 (5.08)	1.250 (31.75)	25 (11)	2-5 (.014-.03)
	5/8 (16)	1.06 (26.9)	2.00 (50.8)	1.75 (44.5)	.28 (7.1)	.200 (5.08)	1.375 (34.93)	35 (16)	3-7 (.02-.05)
	3/4 (19)	1.70 (43.2)	2.88 (73.2)	2.63 (66.8)	.38 (9.6)	.218 (5.5)	2.25 (57.2)	55 (25)	5-9 (.03-.064)
	7/8 (22)	1.70 (43.2)	2.88 (73.2)	2.63 (66.8)	.38 (9.6)	.218 (5.5)	2.25 (57.2)	55 (25)	5-9 (.03-.064)
	15/16 (24)	1.70 (43.2)	2.88 (73.2)	2.63 (66.8)	.38 (9.6)	.218 (5.5)	2.25 (57.2)	55 (25)	5-9 (.03-.064)

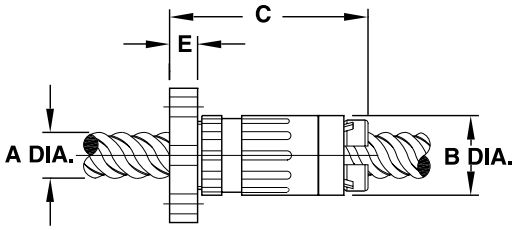

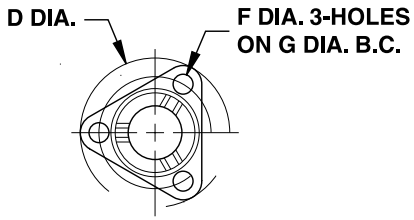

ZBA Series: Thread Mount

	Screw Diam. A inch (mm)	Nut Diam. B inch (mm)	Nut Length C inch (mm)	Flange Diam. D inch (mm)	Flange Thickness E inch (mm)	Thread M* inch	Thread Length N inch (mm)	Dynamic Load lbs (Kg)	Drag Torque oz-in (NM)
ZBA Thread Mount	1/4 (6)	.53 (13.5)	1.3 (33)	.80 (20.3)	.12 (3.1)	5/8-18	.16 (4.1)	5 (2.3)	.5-2 (.004-.014)
	5/16 (8)	.74 (18.8)	2.2 (56)	1.00 (25.4)	.15 (3.8)	5/8-18	.38 (9.7)	10 (5)	1-3 (.007-.02)
	3/8 (10)	.74 (18.8)	2.2 (56)	1.00 (25.4)	.15 (3.8)	5/8-18	.38 (9.7)	10 (5)	1-3 (.007-.02)
	7/16 (11)	.80 (20.3)	2.3 (59)	1.00 (25.4)	.10 (2.5)	15/16-16	.38 (9.7)	15 (7)	2-5 (.014-.03)
	1/2 (13)	.89 (22.6)	2.3 (59)	1.04 (26.4)	.10 (2.5)	15/16-16	.38 (9.7)	25 (11)	2-5 (.014-.03)
	5/8 (16)	1.06 (26.9)	2.3 (58.9)	1.06 (26.9)	.14 (3.6)	15/16-16	.50 (12.7)	35 (16)	3-7 (.02-.05)

* metric available as required

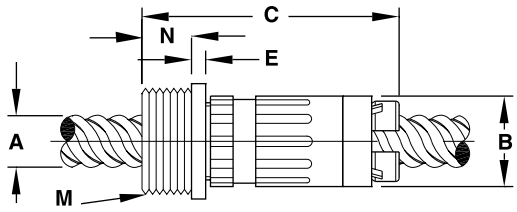

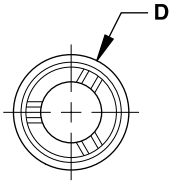

NTG Series – *adjustable drag torque/compact size*

The patented Kerk® NTG Series offers a cost effective anti-backlash assembly for applications requiring precise positional accuracy, repeatability, and smoothness. The NTG has been developed specifically for demanding applications that require zero backlash with minimal drag torque. With its compact size and no moving components, the NTG can also be easily incorporated into customer specified, custom molded parts.

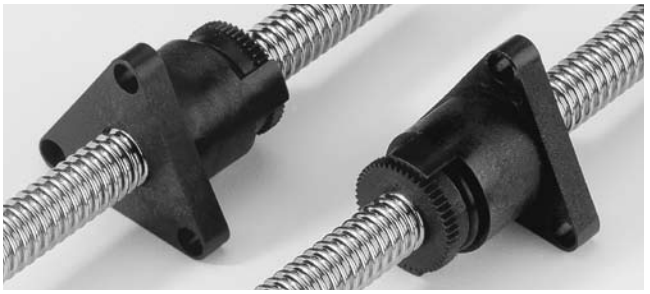

An integral part of the NTG design is the ability to manually adjust the drag torque setting to match specific requirements of the application. This drag torque can also be set at the factory to meet individual customer specifications. This is especially effective with fine leads.

The standard NTG unit utilizes a self-lubricating polyacetal nut on a precision rolled 303 stainless steel screw. End machining to customer specifications and Kerkote® TFE screw coating are optional.

NTG Series: Flange Mount

	Screw Diam. A inch (mm)	Nut Diam. B inch (mm)	Nut Length C inch (mm)	Flange Diam. D inch (mm)	Flange Thickness E inch (mm)	Mounting Hole Diam. F inch (mm)	Bolt Circle Diam. G inch (mm)	Dynamic Load lbs (Kg)	Drag Torque oz-in (NM)
NTG Flange Mount	1/4 (6)	.52 (13.2)	.8 (20.3)	1.00 (25.4)	.16 (4.0)	.143 (3.63)	.750 (19.1)	10 (4.5)	.5-2 (.004-.014)
	5/16 (8)	.80 (20.3)	1.0 (25.4)	1.50 (38.1)	.20 (5.1)	.197 (5.00)	1.125 (28.6)	20 (9.1)	1-3 (.007-.02)
	3/8 (10)	.80 (20.3)	1.0 (25.4)	1.50 (38.1)	.20 (5.1)	.197 (5.00)	1.125 (28.6)	20 (9.1)	1-3 (.007-.02)

NTG MINI Series – *see MINI Series Products*

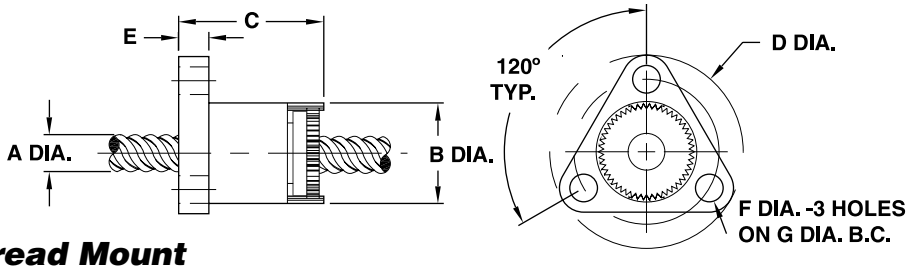

NTG Series: Thread Mount

	Screw Diam. A inch (mm)	Nut Diam. B inch (mm)	Nut Length C inch (mm)	Thread M* inch	Thread Length N inch (mm)	Dynamic Load lbs (Kg)	Drag Torque oz-in (NM)
NTG Thread Mount	1/4 (6)	.520 (13.2)	.9 (22)	7/16 - 20	.250 (6.35)	10 (4.5)	.5-2 (.004-.014)
	5/16 (8)	.800 (20.3)	1.2 (30)	3/4 - 20	.375 (9.53)	20 (9.1)	1-3 (.007-.02)
	3/8 (10)	.800 (20.3)	1.2 (30)	3/4 - 20	.375 (9.53)	20 (9.1)	1-3 (.007-.02)

NTG MINI Series – *see MINI Series Products*

* metric available as required

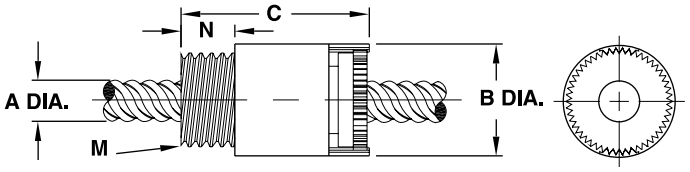

BFW Series – *conventional style, without "anti-backlash" function*

The Kerk® BFW Series general purpose "free-wheeling" nut is for applications not requiring anti-backlash and wear compensation. It provides effective power transmission at minimum cost, and features long life, self-lubricating polyacetal nuts.

The secure mounting and convenience of a circular flange is standard on the BFW nuts with triangular flange and thread mounting as an option. Many custom configurations are available.

Screws are 303 stainless steel with extended life, custom Kerkote® TFE coating optional. Assemblies can be supplied cut-to-length or with ends machined to customer requirements.

BFW Series: Flange Mount *(Round)*

	Screw Diam. A inch (mm)	Nut Diam. B inch (mm)	Nut Length C inch (mm)	Flange Diam. D inch (mm)	Flange Thickness E inch (mm)	Mounting Hole Diam. F inch (mm)	Bolt Circle Diam. G inch (mm)	Dynamic Load lbs (Kg)
BFW Round Flange	1/4 (6)	.50 (12.7)	1.0 (25.4)	1.00 (25.4)	.19 (4.8)	.140 (3.56)	.750 (19.05)	50 (20)
	5/16 (8)	.63 (15.9)	1.0 (25.4)	1.13 (28.7)	.19 (4.8)	.140 (3.56)	.875 (22.23)	75 (35)
	3/8 (10)	.63 (15.9)	1.0 (25.4)	1.13 (28.7)	.19 (4.8)	.140 (3.56)	.875 (22.23)	75 (35)
	7/16 (11)	.75 (19.1)	1.5 (38)	1.50 38.1)	.19 (4.8)	.203 (5.16)	1.125 (28.58)	90 (40)
	1/2 (13)	.75 (19.1)	1.5 (38)	1.50 (38.1)	.19 (4.8)	.203 (5.16)	1.125 (28.58)	150 (68)
	5/8 (16)	.88 (22.2)	1.5 (38)	1.50 (38.1)	.19 (4.8)	.203 (5.16)	1.188 (30.18)	225 (100)
	3/4 (19)	1.12 (28.4)	2.0 (51)	1.75 (44.4)	.25 (6.4)	.203 (5.16)	1.438 (36.53)	350 (160)
	7/8 (22)	1.50 (38.1)	2.0 (51)	2.25 (57.1)	.25 (6.4)	.203 (5.16)	1.875 (47.63)	500 (227)
	15/16 (24)	1.50 (38.1)	2.0 (51)	2.25 (57.1)	.25 (6.4)	.203 (5.16)	1.875 (47.63)	500 (227)

BFW MINI Series – *see MINI Series Products*

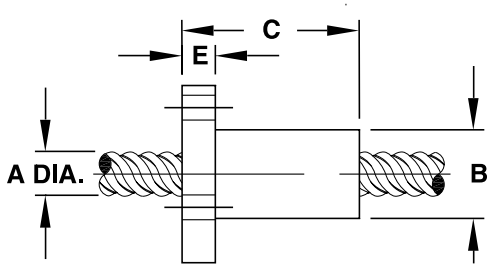

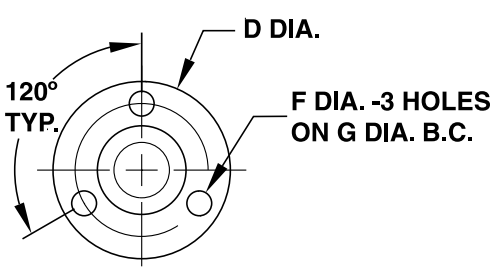

BFW Series: Flange Mount *(Triangular)*

	Screw Diam. A inch (mm)	Nut Diam. B inch (mm)	Nut Length C inch (mm)	Flange Diam. D inch (mm)	Flange Thickness E inch (mm)	Mounting Hole Diam. F inch (mm)	Bolt Circle Diam. G inch (mm)	Dynamic Load lbs (Kg)
BFW Triangular Flange	1/4 (6)	.50 (12.7)	1.0 (25.4)	1.00 (25.4)	.17 (4.3)	.143 (3.63)	.750 (19.05)	50 (20)
	5/16 (8)	.66 (16.6)	1.9 (48.3)	1.50 (38.1)	.17 (4.3)	.197 (5.00)	1.125 (28.58)	75 (35)
	3/8 (10)	.66 (16.6)	1.9 (48.3)	1.50 (38.1)	.17 (4.3)	.197 (5.00)	1.125 (28.58)	75 (35)
	7/16 (11)	.75 (19.1)	1.9 (48.3)	1.50 (38.1)	.17 (4.3)	.197 (5.00)	1.125 (28.58)	90 (40)
	1/2 (13)	.75 (19.1)	1.9 (48.3)	1.50 (38.1)	.17 (4.3)	.197 (5.00)	1.125 (28.58)	150 (68)

BFW MINI Series *– see MINI Series Products*

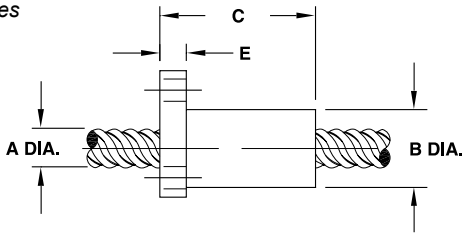

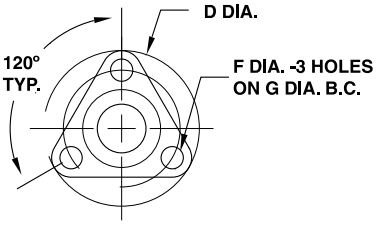

BFW Series: Thread Mount

	Screw Diam. A inch (mm)	Nut Diam. B inch (mm)	Nut Length C inch (mm)	Thread M* inch	Thread Length N inch (mm)	Dynamic Load lbs (Kg)
BFW Thread Mount	1/4 (6)	.63 (15.9)	1.0 (25.4)	9/16 - 18	.187 (4.75)	50 (20)
	5/16 (8)	.75 (19.1)	1.0 (25.4)	5/8 - 18	.250 (6.35)	75 (35)
	3/8 (10)	.75 (19.1)	1.0 (25.4)	5/8 - 18	.250 (6.35)	75 (35)
	7/16 (11)	1.00 (25.4)	1.5 (38.1)	15/16 - 16	.375 (9.53)	90 (40)
	1/2 (13)	1.00 (25.4)	1.5 (38.1)	15/16 - 16	.375 (9.53)	150 (68)
	5/8 (16)	1.00 (25.4)	1.5 (38.1)	15/16 - 16	.375 (9.53)	225 (100)
	3/4 (19)	1.50 (38.1)	2.0 (51)	1 3/8 - 16	.500 (12.70)	350 (160)
	7/8 (22)	1.50 (38.1)	2.0 (51)	1 3/8 - 16	.500 (12.70)	500 (227)
	15/16 (24)	1.50 (38.1)	2.0 (51)	1 3/8 - 16	.500 (12.70)	500 (227)

BFW MINI Series *– see MINI Series Products*

* metric available as required

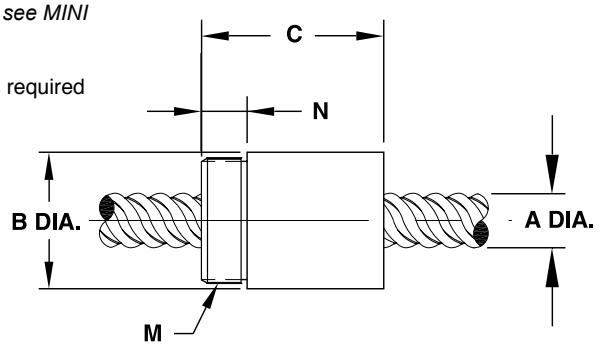

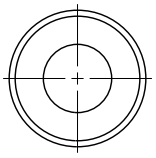

MINI Series *– miniature style asemblies, with or without "anti-backlash" function*

The Kerk® MINI Series brings Haydon Kerk Motion Solutions quality, precision and value to products that were previously off limits to leadscrew technology. To meet a wide range of applications, the MINI Series includes anti-backlash and standard assemblies.

- Using a patented take-up mechanism, the self-compensating **NTB** maintains axial stiffness throughout its life while system torque is held to a minimum.
- The **NTG** allows drag torque to be pre-set according to system requirements.
- The MINI **BFW** Series is for applications not requiring anti-backlash and wear compensation.

All Mini Series assemblies include 303 stainless steel lead screws, available with Haydon Kerk Motion Solutions proprietary, long-life Kerkote® TFE coating. All the nuts are maintenance free, manufactured with self-lubricating polyacetal, and designed to run smoothly and efficiently on Haydon Kerk Motion Solutions precision rolled screws. Perfect for demanding applications, the MINI NTB and NTG nuts provide zero backlash with drag torque of less than 1 oz.-in. (some sizes as low as 0.1 oz.-in.)! Kerk Mini Series Leadscrew Assemblies have what it takes for affordable, precision motion control, sized to fit and built to last.

MINI Series: Flange Mount

	Screw Diam. A inch (mm)	Nut Diam. B inch (mm)	Nut Length C inch (mm)	Flange Height D1 inch (mm)	Flange Width D inch (mm)	Flange Thickness E inch (mm)	Slot Width F inch (mm)	Bolt Circle Diam. G inch (mm)	Dynamic Load lbs (Kg)	Drag Torque oz-in (NM)
BFW Flange Mount	1/8 (3)	0.40 (10.2)	0.50 (13)	0.40 (10.2)	0.75 (19.1)	0.13 (3.2)	0.120 (3.05)	0.600 (15.24)	25 (11)	free wheeling
	3/16 (5)	0.40 (10.2)	0.50 (13)	0.40 (10.2)	0.75 (19.1)	0.13 (3.2)	0.120 (3.05)	0.600 (15.24)	25 (11)	free wheeling
NTB Flange Mount	1/8 (3)	0.40 (10.2)	0.50 (13)	0.40 (10.2)	.075 (19.1)	0.13 (3.2)	0.120 (3.05)	0.600 (15.24)	5 (2.3)	0.5 (.004)
	3/16 (5)	0.40 (10.2)	0.50 (13)	0.40 (10.2)	0.75 (19.1)	0.13 (3.2)	0.120 (3.05)	0.600 (15.24)	5 (2.3)	0.5 (.004)
NTG Flange Mount	1/8 (3)	0.40 (10.2)	0.50 (13)	0.40 (10.2)	0.75 (19.1)	0.13 (3.2)	0.120 (3.05)	0.600 (15.24)	5 (2.3)	0.5 (.004)
	3/16 (5)	0.40 (10.2)	0.50 (13)	0.40 (10.2)	0.75 (19.1)	0.13 (3.2)	0.120 (3.05)	0.600 (15.24)	5 (2.3)	0.5 (.004)

For 1/4-in diameter screws and larger, please refer to the individual sections for each nut type.

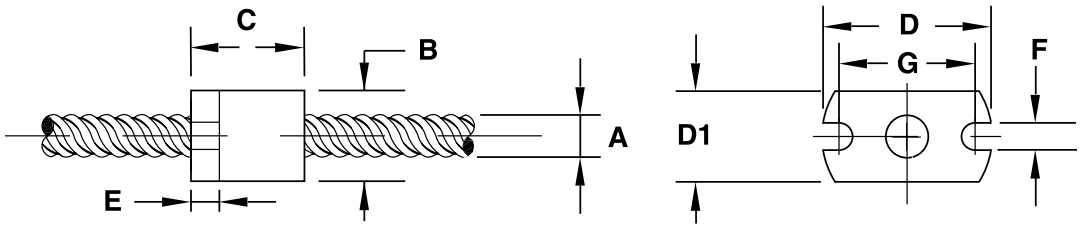

MINI Series: Thread Mount

	Screw Diam. A inch (mm)	Nut Diam. B inch (mm)	Nut Length C inch (mm)	Thread M* inch	Thread Length N inch (mm)	Dynamic Load lbs (Kg)	Drag Torque oz-in (NM)
BFW Thread Mount	1/8 (3)	0.40 (10.2)	0.50 (13)	3/8-24	0.187 (4.75)	25 (11)	free wheeling
	3/16 (5)	0.40 (10.2)	0.50 (13)	3/8-24	0.187 (4.75)	25 (11)	free wheeling
NTB Thread Mount	1/8 (3)	0.40 (10.2)	0.50 (13)	3/8-24	0.160 (4.06)	5 (2.3)	0.5 (.004)
	3/16 (5)	0.40 (10.2)	0.50 (13)	3/8-24	0.160 (4.06)	5 (2.3)	0.5 (.004)
NTG Thread Mount	1/8 (3)	0.40 (10.2)	0.50 (13)	3/8-24	0.125 (3.18)	5 (2.3)	0.5 (.004)
	3/16 (5)	0.40 (10.2)	0.50 (13)	3/8-24	0.125 (3.18)	5 (2.3)	0.5 (.004)

* metric available as required

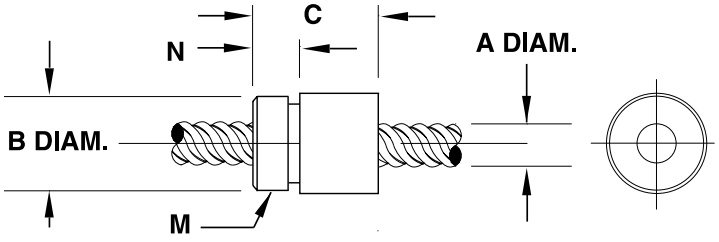

Custom nut designs can include multi-functionality, eliminating additional components to simplify product manufacturing. This can deliver both cost- and space-saving benefits.

Custom Nut Configurations

In addition to The Kerk® standard nut types, modified and complete custom configurations represent a large portion of the company's production. Modifications may be simple changes such as different mounting hole patterns or mounting threads, small dimensional changes, or special materials. Haydon Kerk Motion Solutions can provide tremendous value by producing a multi-functional nut. Using custom molds and specialty machining, nuts can also include guide bushings, carriages, timing pulleys, gears, syringe components, sensor mounts and flags, encoder features, clamps and many other complimentary elements. In addition, custom designed nuts can offer quick release mounts, partial thread engagement, half nut construction or special shapes and geometries. Special materials are offered to extend the performance of our assemblies. Materials can be chosen for extreme temperature, chemical compatibility, autoclaving, agency approvals, special loadings and many other specific requirements.

Custom geometries and custom materials can be combined for a wide variety of product application requirements.

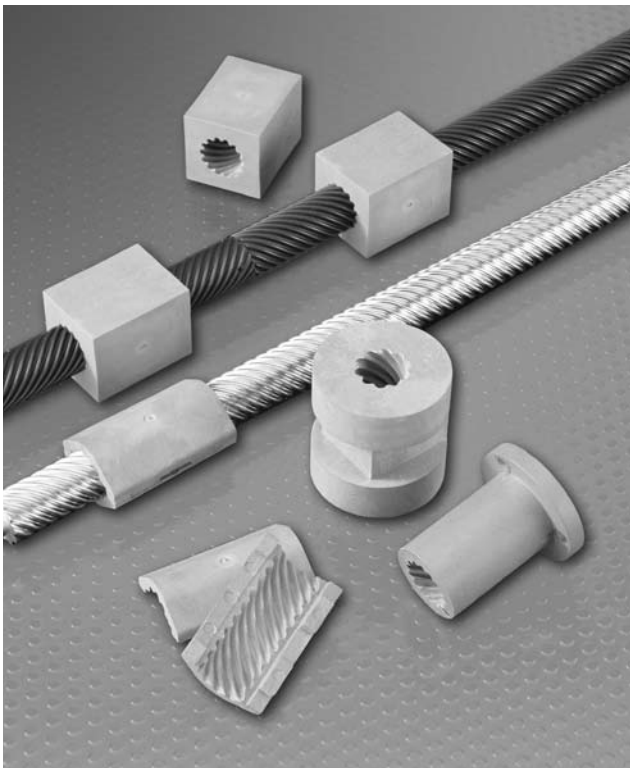

Stepper Motor
Linear
Actuators

Haydon Kerk Motion Solutions, Inc. • www.HaydonKerk.com • Phone: 800.243.2715 • International: 203.756.7441

Hybrid Linear Actuators

Series	Size (square)	Configuration#	Stroke (mm)		Max Force (N)	Travel/step (micron)
			C#	NC / EL#		
21000	21 mm (0.8-in)	C / NC / EL	9 - 38.1	Up to ≈ 200	2 - 44	1.5 - 40
28000	28 mm (1.1-in)	C / NC / EL	12.7 - 63.5	Up to ≈ 250	15 - 90	3 - 50
35000	35 mm (1.4-in)	C / NC / EL	12.7 - 63.5	Up to ≈ 300	50 - 220	1.5 - 50
43000	43 mm (1.7-in)	C / NC / EL	12.7 - 63.5	Up to ≈ 400	100 - 220	1.5 - 50
57000	57 mm (2.3-in)	C / NC / EL	12.7 - 63.5	Up to ≈ 500	300 - 890	4 - 50
87000	87 mm (3.4-in)	C / NC / EL	12.7 - 63.5	Up to ≈ 500	400 - 2224	12.7 - 127

Double Stack Hybrid Linear Actuators

Series	Size (square)	Configuration#	Stroke (mm)		Max Force (N)	Travel/step (micron)
			C#	NC / EL#		
28000	28 mm (1.1-in)	C / NC / EL	12.7 - 63.5	Up to ≈ 250	30 - 133 [A]	3 - 50
35000	35 mm (1.4-in)	C / NC / EL	12.7 - 63.5	Up to ≈ 300	50 - 220 [A]	15.8 - 127
43000	43 mm (1.7-in)	C / NC / EL	12.7 - 63.5	Up to ≈ 400	50 - 337	15.8 - 127
57000	57 mm (2.3-in)	C / NC / EL	12.7 - 63.5	Up to ≈ 500	150 - 890 [A]	12.7 - 127

[A] Maximum force limited by bearing capabilities.

Dual Action Actuators

Size (square)	Torque (Ncm)	Linear Stroke (mm)	Max Force	Travel/step (micron)	Load Limits
35 mm (1.4-in)	12.7	Up to 101.6†	50 - 220 N (25 lbs)	3 - 50	133 N (30 lbs)
43 mm (1.7-in)	13	Up to 101.6†	100 - 220 N (50 lbs)	1.5 - 50	222 N (50 lbs)

† Standard strokes: 25.4 mm (1-in.), 50.8 mm (2-in.) and 101.6 mm (4-in.).

Can-Stack Linear Actuators

Series	Ø Size	Configuration#	Stroke (mm)		Max Force (N)	Travel/step (micron)
			C#	NC / EL#		
LC15	15 mm (.59-in)	C	12.7	–	7	20
(Z)20000	20 mm (.79-in)	C / NC / EL	12.7	Up to ≈ 150	3 - 35	25 - 100
(Z)26000	26 mm (1-in)	C / NC / EL	12.7-31	Up to ≈ 150	10 - 80	6 - 100
36000	36 mm (1.4-in)	C / NC / EL	15.5	Up to ≈ 150	15 - 160	3 - 100
46000	46 mm (1.8-in)	C / NC / EL	23.1	Up to ≈ 200	20 - 260	12.7 - 400

Configurations = Captive / Non-captive / External Linear Lead-screws

Drives

	Type	Motor Leads	Input Voltage (VDC)	Current/Phase (I)	Number of Microsteps
40105	Chopper	4	20 - 40	2	2
44103	Chopper	4*	24 - 28	1	8
DCS4020	Chopper	4	24 - 40	2	2
DCM8028	Chopper	4 / 6 / 8	20 - 80 *E*	2.8	256
DCM8055	Chopper	4 / 6 / 8	20 - 80 *E*	5.5	256

* 5V motors only. E = For Europe – the max. input voltage must be limited to 70 VDC (CE regulations).

Suppose you, as an engineer, are tasked to design a machine or part of a machine that requires precise linear positioning. How would you go about accomplishing this? What is the most straightforward and effective method?

When students are trained in classic mechanical engineering, they are taught to construct a system using conventional mechanical components to convert rotary into linear motion. Converting rotary to linear motion can be accomplished by several mechanical means using a motor, rack and pinion, belt and pulley, and other mechanical linkages. The most effective way to accomplish this rotary to linear motion, however, is within the motor itself.

First, What Exactly Is a Stepper Motor-Based Linear Actuator?

A linear actuator is a device that develops a force and a motion through a straight line. A stepper motor-based linear actuator uses a stepping motor as the source of rotary power. Inside the rotor, there's a threaded precision nut instead of a shaft. The shaft is replaced by a leadscrew. As the rotor turns (as in a conventional stepper motor), linear motion is achieved directly through the nut and threaded screw. It makes sense to accomplish the rotary to linear conversion directly inside the motor, as this approach greatly simplifies the design of rotary to linear applications. This allows high resolution and accuracy ideal for use in applications where precision motion is required.

Basic Components

Stepper Motor

Why use a stepper motor instead of a conventional rotary motor? Unlike other rotary motors, steppers are unique in that they move a given amount of rotary motion for every electrical input pulse. This makes steppers a perfect solution for use in positioning applications. Depending on the type of stepper motor, our motors can achieve resolutions from 18 rotational degrees per step to 0.9 rotational degrees per step. This unique "stepping" feature coupled with the characteristics of the lead screw provides a variety of very fine positioning resolutions

How Does the Stepper Motor Work?

Permanent magnet stepper motors incorporate a permanent magnet rotor, coil windings, and a steel stator capable of carrying magnetic flux. Energizing a coil winding creates an electromagnetic field with a NORTH and SOUTH pole as shown in figure 1.

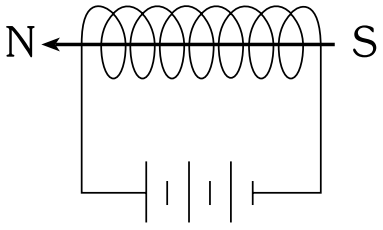

Figure 1. Magnetic field created by energizing a coil winding

The stator conducts the magnetic field and causes the permanent magnet rotor to align itself to the field. The stator magnetic field can be altered by sequentially energizing and de-energizing the stator coils. This causes a "stepping" action and incrementally moves the rotor resulting in angular motion.

"One-Phase On" Stepping Sequence

Figure 2 illustrates a typical step sequence for a simplified 2 phase motor. In step 1, phase A of the 2 phase stator is energized. This magnetically locks the rotor in the position shown, since unlike poles attract. When phase A is turned off and phase B is turned on, the rotor moves 90° clockwise. In step 3, phase B is turned off and phase A is turned on but with the polarity reversed from step 1. This causes another 90° rotation. In step 4, phase A is turned off and phase B is turned on, with polarity reversed from step 2. Repeating this sequence causes the rotor to move clockwise in 90° steps.

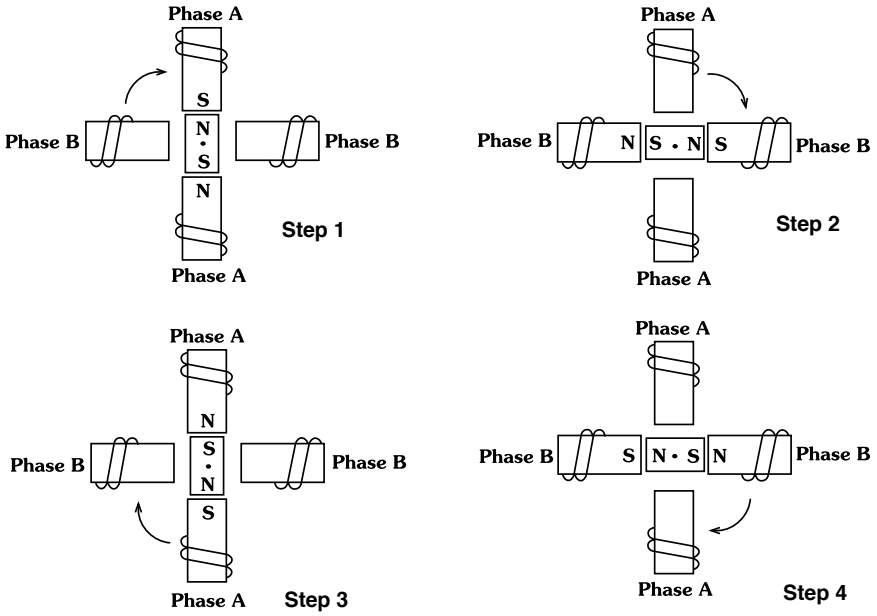

Figure 2. "One Phase On" stepping sequence for two phase motor "Two-Phase On" Stepping Sequence

"Two-Phase On" Stepping Sequence

A more common method of stepping is "two phase on" where both phases of the motor are always energized. However, only the polarity of one phase is switched at a time, as shown in Figure 3. With two phase on stepping, the rotor aligns itself between the "average" north and "average" south magnetic poles. Since both phases are always on, this method provides 41.4% more torque than "one phase on" stepping.

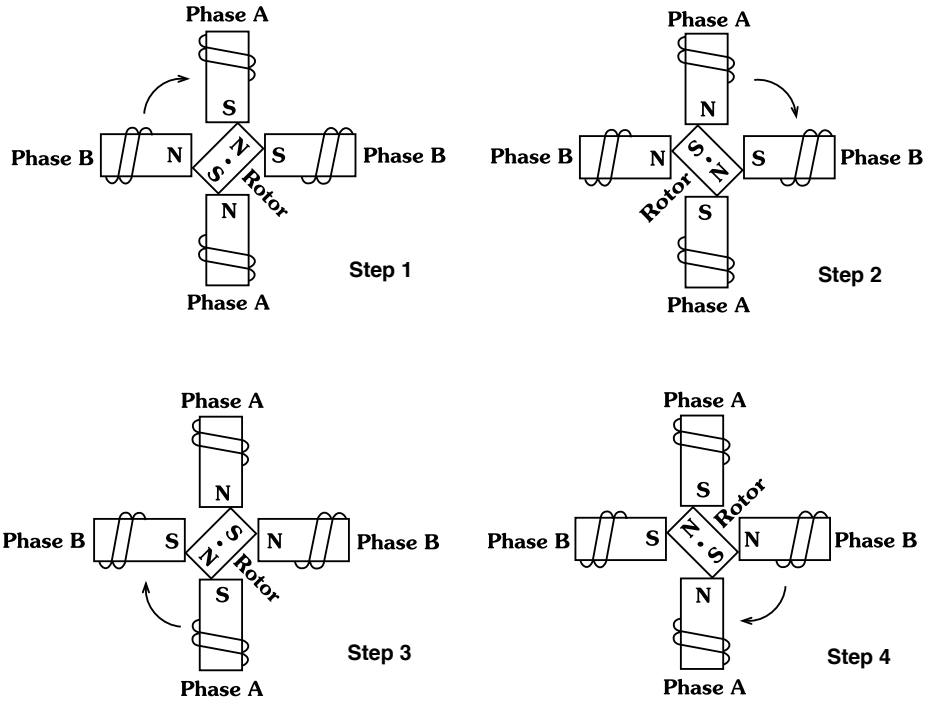

Figure 3. "Two Phase On" stepping sequence for two phase motor

Leadscrew

The acme leadscrew is a special type of screw that provides a linear force using the simple mechanical principle of the inclined plane. Imagine a steel shaft with a ramp (inclined plane) wrapped around it. The mechanical advantage (force amplification) is determined by the angle of the ramp which is a function of the lead, pitch, and diameter of the screw.

Lead – The axial distance a screw thread advances in a single revolution
Pitch – The axial distance measured between adjacent thread forms

The threads of the leadscrew allow a small rotational force to translate into a large load capability depending on the steepness of the ramp (the thread lead). A small lead (more threads per inch) will provide a high force and resolution output. A large lead (fewer threads) will provide a lower force, but a correspondingly higher linear speed from the same source of rotary power.

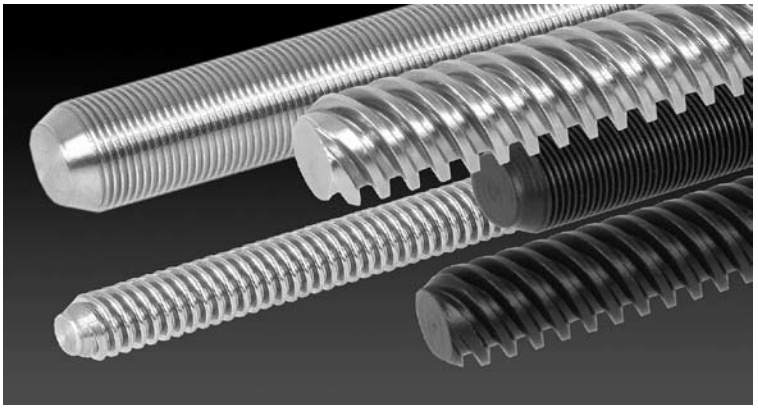

Examples of different thread configurations: Finer lead threads will provide higher force but lower speeds; Coarse lead threads will provide higher speeds but lower force.

Integrated Nut

Of equal, if not greater importance to the lead screw is the nut that drives the screw. This nut is often imbedded in the rotor of the stepping motor, which makes this actuator configuration unique from other rotary to linear techniques. The traditional nut material is a bearing grade bronze which lends itself to the required machining of the internal threads. Bronze is a traditional compromise between physical stability and lubricity. Compromise, however, is the key word since it excels at neither.

Friction Considerations

A much better material for a power nut in the linear actuator is a lubricated thermoplastic material. With the evolution of new engineered plastics, the screw threads may now travel with a lower overall coefficient of friction. This is illustrated below in Figure 4.

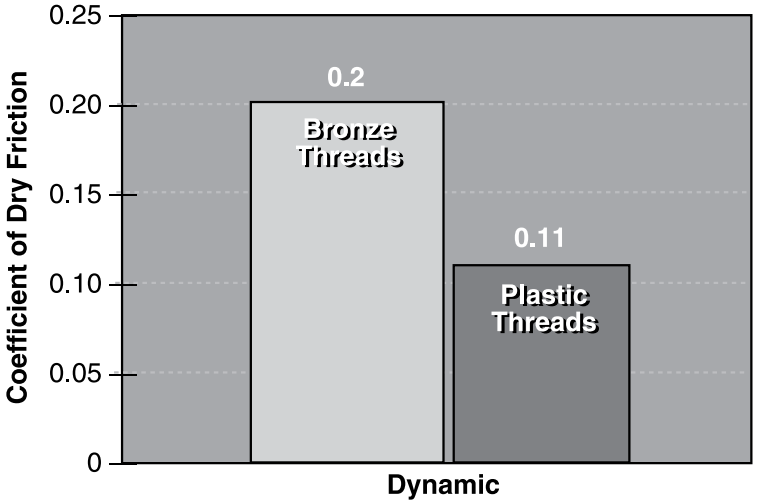

Figure 4.

FRICTION EFFECTS

Comparative friction effects of stainless steel on select rotor materials

Thermal Considerations

Given the data, it was clear that a plastic drive nut provides the lower coefficient of friction when compared with bronze. Unfortunately, as good as the plastic is for threads, it is not stable enough for the bearing journals of a hybrid motor, which are critical in the hybrid motor design. Under a continuous full load condition, plastic bearing journals can expand as much as 0.004", where brass will expand only 0.001". This is illustrated in Figure 5. In order to achieve the high performance characteristics of the stepper motor, the design must maintain a stator-to-rotor airgap of only a few thousandths of an inch. This tight design requirement demands thermally stable bearing journals.

Figure 5.

THERMAL EFFECT

Linear thermal expansion for 1-inch (25.4 mm) samples

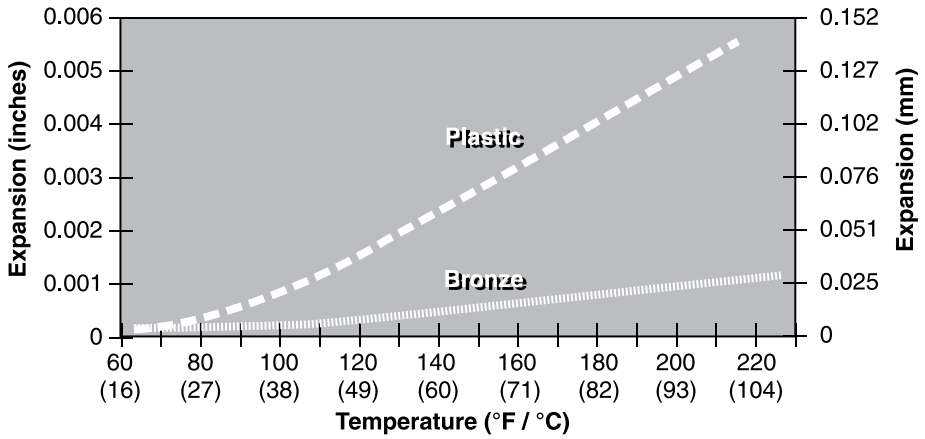

By injection molding plastic threads within a brass rotor assembly, both characteristics of low friction and high bearing journal stability is achieved (see figure 6).

Figure 6.

POWER NUT CONFIGURATION

Embedded in Permanent Magnet Rotor

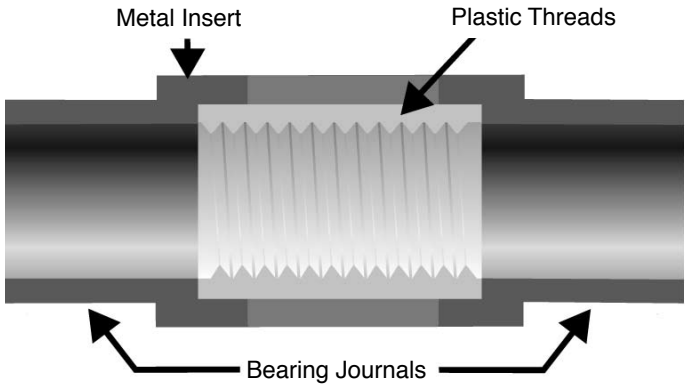

Effects on Actuator Life

The result is a product with quiet operation, higher efficiencies, and higher life expectancies. Motor life is improved by 10 to 100 times over the traditional bronze nut configuration, as illustrated in the life test chart in figure 7.

Figure 7.

LIFE TEST: BRONZE vs PLASTIC

Nuts used in Size 17 and 23 Hybrid Linear Actuators

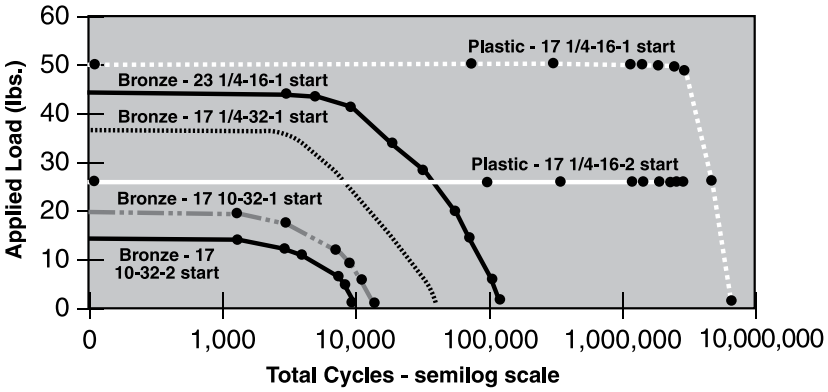

Extending Actuator Life

With proper application consideration, Haydon linear actuators deliver up to 20 million cycles. Ultimately, motor fatigue and resultant life are determined by each customer's unique application.

There are some general guidelines that should be understood in order to insure maximum life. Ultimately, to determine an actuator's performance in a given system it's best to perform testing in the final assembly in "field conditions" or in a setting that closely approximates those conditions.

Since a stepper has no brushes to wear out, its life usually far exceeds that of other mechanical components of the system. If a stepper does fail there are certain components which are likely to be involved. Bearings and leadscrew/nut interface (in linear actuators) are typically the first components to experience fatigue. Required torque or thrust and operating environment are the factors which affect these motor components.

Extensive testing has shown that motor life increases exponentially with reduced operating loads. Environmental factors such as high humidity, exposure to harsh chemicals or gases, excessive dirt/debris, and heat will affect motor life. Mechanical factors in the assembly such as side loading of the shaft (linear actuators) or an unbalanced load (rotary motors) will also affect life.

Properly designing a system which minimizes these factors and also insuring the motor is operating within its electrical specifications will ensure maximum motor life. The first step in maximizing life is choosing a motor which has a safety factor of 2 or more. The second step is insuring the system is mechanically sound by minimizing side loading, unbalanced loads, and impact loads. Also insure techniques to allow effective heat dissipation. Air flow around the motor or mounting which provides some heat sinking are effective means to insure the motor operates at a safe temperature.

If these simple, yet effective guidelines are followed, the linear actuators will provide reliable operation over millions of cycles.

Putting It All Together

Figure 8 below is a cross section drawing of a "captive" type linear actuator. Captive indicates that there is already an anti-rotation mechanism built into the actuator through the use of a splined "anti-rotation" shaft and a "captive sleeve". The "captive" configuration is ideal for use in precision liquid drawing/dispensing and proportional valve control. Other forms of linear actuators are "non-captive" and "external linear" as pictured in Figures 9 and 10.

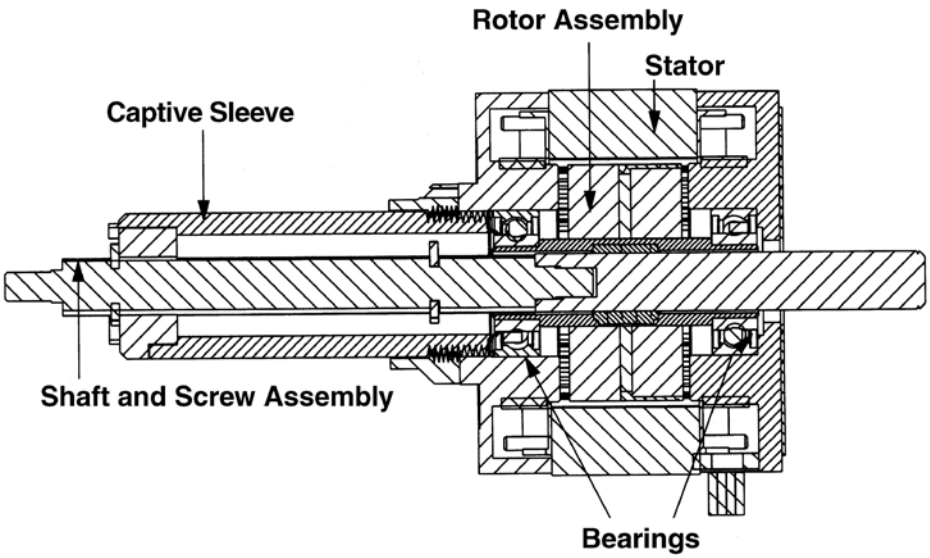

Figure 8.

TYPICAL HYBRID LINEAR ACTUATOR

Captive linear stepping actuator

Figure 9.

HYBRID LINEAR ACTUATORS

Size 17 Series (1.7-in / 43 mm square) captive, non-captive and external linear, available in 1.8 and 0.9 rotational degrees per step.

Figure 10.

CAN-STACK LINEAR ACTUATORS

26000 Series (Ø 1-in / 26 mm) Captive, external linear, non-captive available in 15 and 7.5 rotational degrees per step.

All This Theory Is Good, But How Are They Sized?

Sizing a linear actuator is quite easy once you understand the basic needs of the application. The following is the minimum information needed to begin sizing the proper device.

1) Linear force needed to move the load, expressed in Newtons (N)
2) Linear distance the load needs to be moved, expressed in meters (M)
3) Time required to move the load, expressed in seconds (s)
4) Table 1 – illustrated below
5) Performance curves illustrated in Haydon linear actuator catalogs

Power Requirements

The power required to meet the application is now calculated using the parameters above. This will allow the user to easily choose the correct motor framesize needed.

$$\text{P linear} = \frac{\text{(distance traveled in Meters) (force in Newtons)}}{\text{(Time to travel the distance in Seconds)}} = \text{watts}$$

Once the power is known in watts, choose the proper framesize of the actuator as listed in Table 1 (next page).

All stepper motor linear actuators require a drive to send the pulses to the motor. As seen in the table, the power for both an L/R drive and a chopper drive is listed. Most applications today use an electronic chopper drive. Unless the application is battery powered (as in a hand-held portable device), a chopper drive is highly recommended to get the maximum performance from the linear actuator.

Table 1. Frame Sizes and Performance Based On Required Output Power

Hybrid Single Stack					
				Max. Linear Power (watts)	
Series	Size	Max Force (N)	Linear Travel Per Step (micron)	L/R Drive	Chopper Drive
21000	8	44	1.5 – 40	0.3	0.37
28000	11	90	3 – 50	0.27	0.51
35000	14	220	1.5 – 50	0 .59	1.5
43000	17	220	1.5 – 50	1.02	2.31
57000	23	890	4 – 50	1.47	6
87000	34	2224	12.7 – 127	N/A	21.19

Hybrid Double Stack					
				Max. Linear Power (watts)	
Series	Size	Max Force (N)	Linear Travel Per Step (micron)	L/R Drive	Chopper Drive
28000	11	133	3 – 50	N/A	1.14
35000	14	220	15.8 – 127	N/A	2.7
43000	17	337	15.8 – 127	N/A	4.62
57000	23	890	12.7 – 127	N/A	10.08

Can-Stack					
				Max. Linear Power (watts)	
Series	Size Ø (mm)	Max Force (N)	Linear Travel Per Step (micron)	L/R Drive	Chopper Drive
15000	15	7	20	0.025	0.03
20000	20	16	25 – 100	0.05	0.06
Z20000	20	35	25 – 100	0 .09	0.23
26000	26	50	6 – 100	0.17	0.18
Z26000	26	80	6 – 100	0.18	0.48
36000	36	160	3 – 100	0.23	0.69
46000	46	260	12.7 – 400	0.55	1.13

Velocity

After calculating the mechanical power needed to meet the application requirements, the linear velocity in inches per second is calculated using the following equation.

$$\text{Velocity linear} = \frac{\text{Required travel distance (in)}}{\text{Time to achieve travel (s)}} = \text{in / s}$$

Force vs Linear Velocity Curves

Once the required actuator framesize is determined and the linear velocity is calculated, the "force vs linear velocity curve" is used to determine the proper resolution of the actuator lead screw.

Figure 11.

FORCE vs LINEAR VELOCITY SIZE 17 SERIES 43000

.218 (5.54 mm) Ø leadscrew, Bipolar, Chopper Drive, 100% Duty Cycle

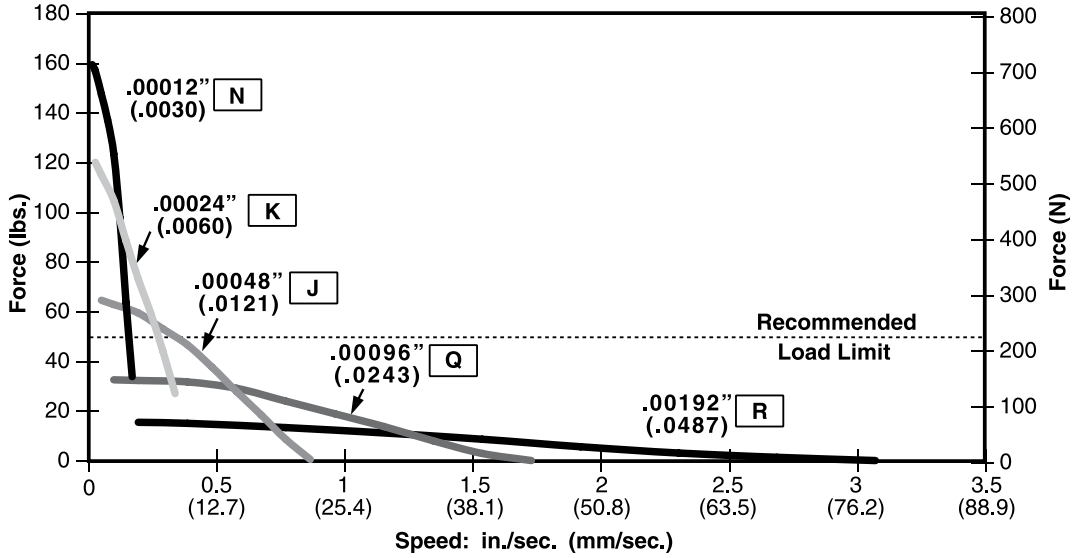

Actuator Life

There are many variables that ultimately determine life of the actuator. The best way to predict life is through application testing, which is highly recommended.

There is, however, a first approximation technique that can help estimate this value. The stepper motor prime mover contains no brushes to wear out and also utilize precision long-life ball bearings. The main wear component is the power nut. The number of cycles can be summarized as a function of load, as illustrated in Figure 12 below.

Figure 12.

% RATED LOAD vs NUMBER OF CYCLES

Cycles on a standard stroke actuator

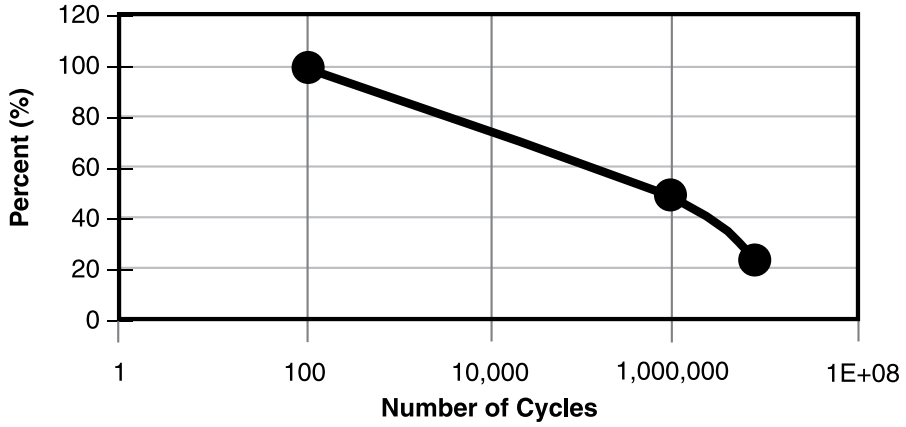

With proper application, Haydon linear actuators deliver up to 20 million cycles and Haydon rotary motors provide up to 25,000 hours of service. Ultimately motor fatigue and resultant life are determined by each customer's unique application. The following definitions are important for understanding motor life and fatigue.

Continuous Duty: Running a motor at its rated voltage.

25% Duty Cycle: Running a motor at double its rated power. The motor is "on" approximately 25% of the time. The motor generates about 60% more output than at rated voltage. Note, duty cycle is not related to the load placed on the motor.

Life: A linear actuator's life is the number of cycles that the motor is able to move at a prescribed load and maintain step accuracy. Rotary motor life is the number of hours of operation.

One Cycle: A linear actuator's cycle consists of extending and retracting back to the original position.

EXAMPLE #1

Application Requirements:

Required Force (lbs) =	15 lbs
Required Travel (inches) =	3 in
Time To Achieve Travel (sec) =	6 sec
Desired Cycles =	1,000,000
Linear Velocity (in / sec) =	3 in / 6 sec = 0.5 in / sec

Calculate the initial rated force based on required # of cycles:

Step 1:
Refer to Figure 12 and determine the % wear after 1,000,000 cycles.
This is indicated with the blue line in Figure 13 below.

Figure 13.

LIFE EXPECTANCY

Cycles on a standard stroke actuator

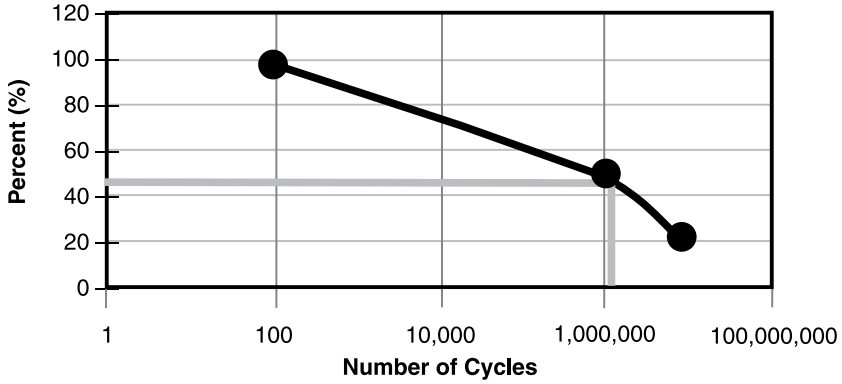

Step 2:
As indicated in the chart, in order to get 1,000,000 cycles, a factor of 0.5 must be used when sizing the actuator. The initial rated force required in order to meet the load after 1,000,000 cycles is therefore…

15 lbs / 0.5 = 30 lbs

Step 3:
Convert lbs to Newtons (N)

30 lbs / (0.225 lbs / N) = 133 N

Determine required travel in meters

3 in x (0.0254 M / in) = 0.0762 M

Choose the proper framesize actuator using the selector chart

Step 1:
Determine the required linear mechanical power in watts

P_{linear} = (133 N x 0.0762 M) / 6 sec = 1.7 N-M / sec = 1.7 watts

Step 2:
Use **Table 1** to determine the correct framesize actuator. As discussed earlier in the paper, most applications will use a chopper drive to supply the required input pulses to the stepper motor. The 43000 (Size 17 Hybrid) was chosen for this application, as highlighted in the **"Hybrid Single Stack"** section of Table 1.

Hybrid Single Stack					
				Max. Linear Power (watts)	
Series	Size	Max Force (N)	Linear Travel Per Step (micron)	L/R Drive	Chopper Drive
21000	8	45	1.5 – 40	0.3	0.37
28000	11	90	3 – 50	0.27	0.51
35000	14	220	1.5 – 50	0 .59	1.5
43000	**17**	220	1.5 – 50	1.02	**2.31**
57000	23	880	4 – 50	1.47	6
87000	34	2200	12.7 – 127	N/A	21.19

Determine the proper resolution using the "Force vs Linear Velocity" chart

As determined by the life calculation performed above, an initial load of 30 lbs is to be moved at a velocity of 0.5 in / sec. The resulting lead screw resolution required in the Size 17 hybrid motor is 0.00048" (J resolution), as indicated in figure 14 below.

Figure 14.

FORCE vs LINEAR VELOCITY SIZE 17 SERIES 43000

.218 (5.54 mm) Ø leadscrew, Bipolar, Chopper Drive, 100% Duty Cycle

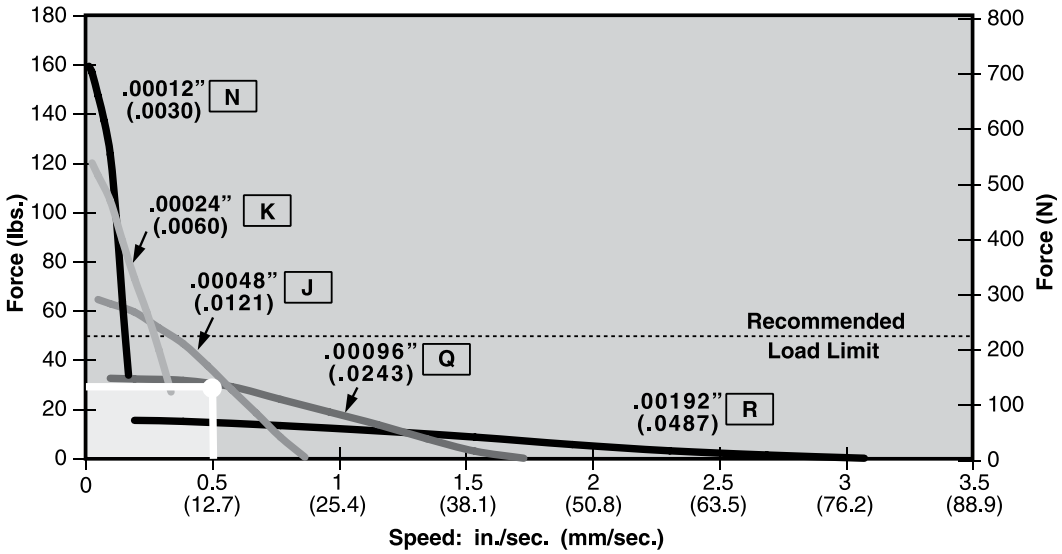

Verify selection by checking force at the required step rate

Earlier in the paper, it was discussed that the lead screw advances based on the number of input steps to the motor. Haydon performance curves are expressed in both "in/sec" (as illustrated in Figure 14) and also in "steps / sec" (Figure 15 below). As an effective check, verify the selection by checking the force at the required step rate.

Resolution chosen	0.00048 in / step ("J" screw)
Req'd linear velocity	0.5 in / sec
Req'd step rate	(0.5 in / sec) / (0.00048 in / step) = 1041 steps / sec

Figure 15.

FORCE vs PULSE RATE SIZE 17 SERIES 43000

.218 (5.54 mm) Ø leadscrew, Bipolar, Chopper Drive, 100% Duty Cycle

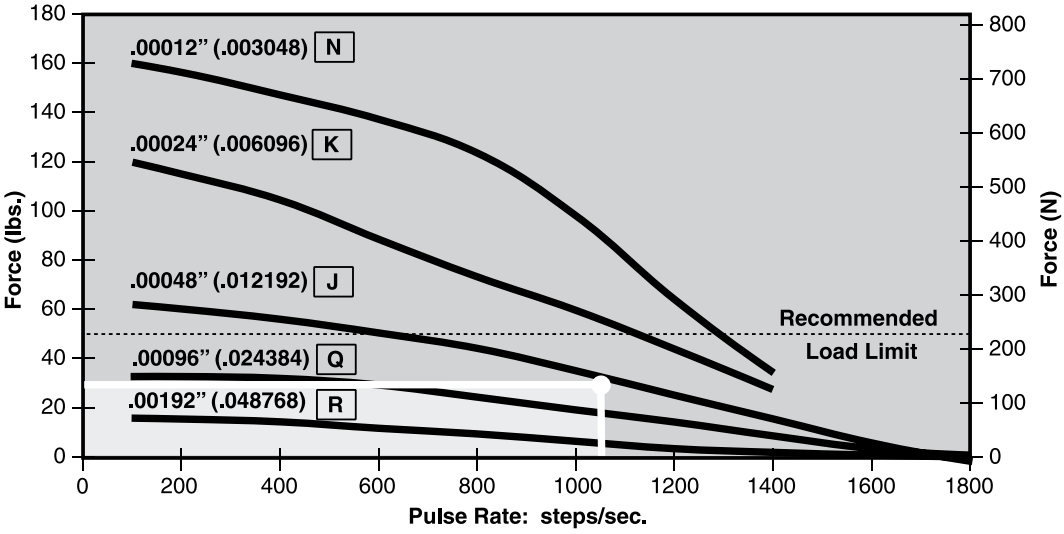

Figures 14 and 15 are good illustrations of how the pulses to the stepper motor translate into linear motion through the lead screw.

EXAMPLE #2

Haydon Kerk Motion Solutions, Inc. offers a line of Double Stack Hybrid Actuators that are designed to meet the needs of higher speed applications. This next example illustrates a typical situation where higher speed is required to perform the motion.

All other application requirements with the exception of the move velocity is unchanged from Example #1.

Application Requirements:

Required Force (lbs) =	15 lbs
Required Travel (inches) =	3 in
Time To Achieve Travel (sec) =	3 sec (modified application requirement)
Desired Cycles =	1,000,000
Linear Velocity (in / sec) =	3 in / 3 sec = 1.0 in / sec (modified linear velocity)

Calculate the initial rated force based on required # of cycles:

Step 1:
Refer to Figure 10 and determine the % wear after 1,000,000 cycles. This is indicated with the blue line in Figure 11. This will be identical to that shown in Sizing Example #1 because the number of desired cycles didn't change.

Step 2:
As indicated in Figure 11, in order to get 1,000,000 cycles, a factor of 0.5 must be used when sizing the actuator. The initial force required in order to meet the load after 1,000,000 cycles is therefore…

15 lbs / 0.5 = 30 lbs *(Unchanged from Example #1)*

Step 3:
Convert lbs to Newtons (N)

30 lbs / (0.225 lbs / N) = 133 N *(Unchanged from Example #1)*

Determine required travel in meters

3 in x (0.0254 M / in) = 0.0762 M (*(Unchanged from Example #1)*

Choose the proper framesize actuator using the selector chart

Step 1:
Determine the required linear mechanical power in watts

P_{linear} = (133N x 0.0762M) / 3s = 3.4 N-M / s = 3.4 watts *(This changed from 1.7 watts needed in Example #1)*

As shown from the result above, the required output power increased by 100% due to the application requirement change from a 6s Time to Achieve Travel (Example #1) to a 3s Time to Achieve Travel.

Step 2:
Assuming the mounting footprint is to remain unchanged (in this case, the Size 17 motor frame), using the Double Stack version of the actuator would easily meet the application requirements. This is highlighted in the **"Hybrid Double Stack"** section of **Table 1**.

Hybrid Double Stack					
				Max. Linear Power (watts)	
Series	Size	Max Force (N)	Linear Travel Per Step (micron)	L/R Drive	Chopper Drive
28000	11	133	3 – 50	N/A	1.14
35000	14	220	15.8 – 127	N/A	2.7
43000	**17**	350	15.8 – 127	N/A	**4.62**
57000	23	880	12.7 – 127	N/A	10.08

Determine the proper resolution using the "Force vs Linear Velocity" chart

As determined by the life calculation performed above, an initial load of 30 lbs is to be moved at a new velocity of 1.0 in/s. The intercept falls under curve "C". The resulting lead screw resolution required in the Size 17 double stack hybrid motor is 0.00125" (C resolution), as indicated in Figure 16 below.

Figure 16.

FORCE vs LINEAR VELOCITY SIZE 17 DOUBLE STACK SERIES 43000

.250 (6.35 mm) Ø leadscrew, Bipolar, Chopper Drive, 100% Duty Cycle

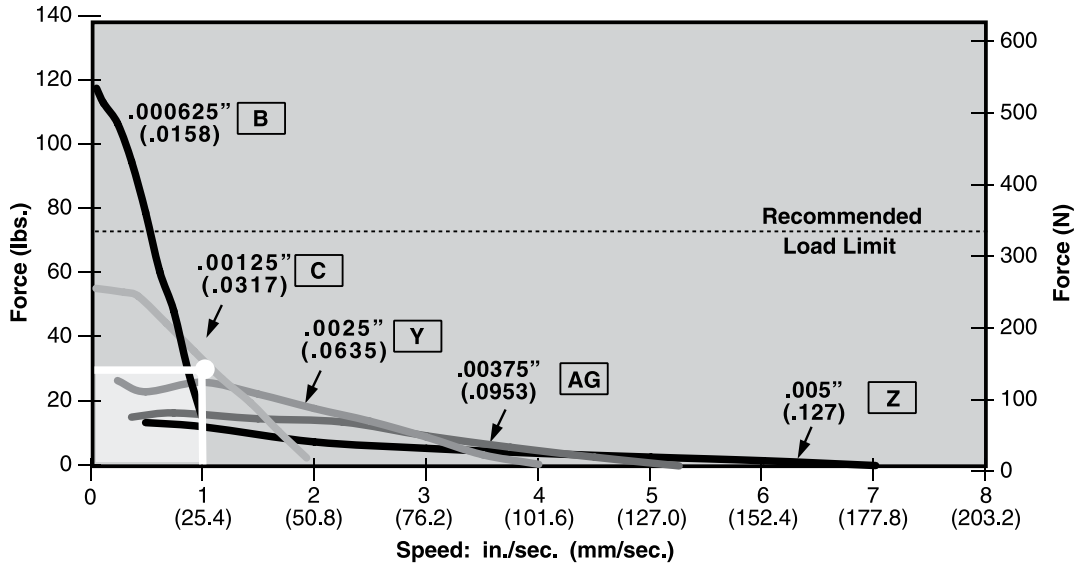

Verify selection by checking force at the required step rate

As discussed earlier, Haydon motor performance curves are expressed in both "in/sec" and also in "steps/sec". As an effective check, verify the selection by checking the force at the required step rate.

Resolution chosen	0.00125 in / step ("C" screw)
Required linear velocity	1.0 in / sec
Required step rate	(1.0 in / sec) / (0.00125 in / step) = 800 steps / sec

The intercept of the required force and pulse rate (load point) is confirmed to fall under curve "C" as calculated.

Figure 17.

FORCE vs PULSE RATE SIZE 17 DOUBLE STACK SERIES 43000

.250 (6.35 mm) Ø leadscrew, Bipolar, Chopper Drive, 100% Duty Cycle

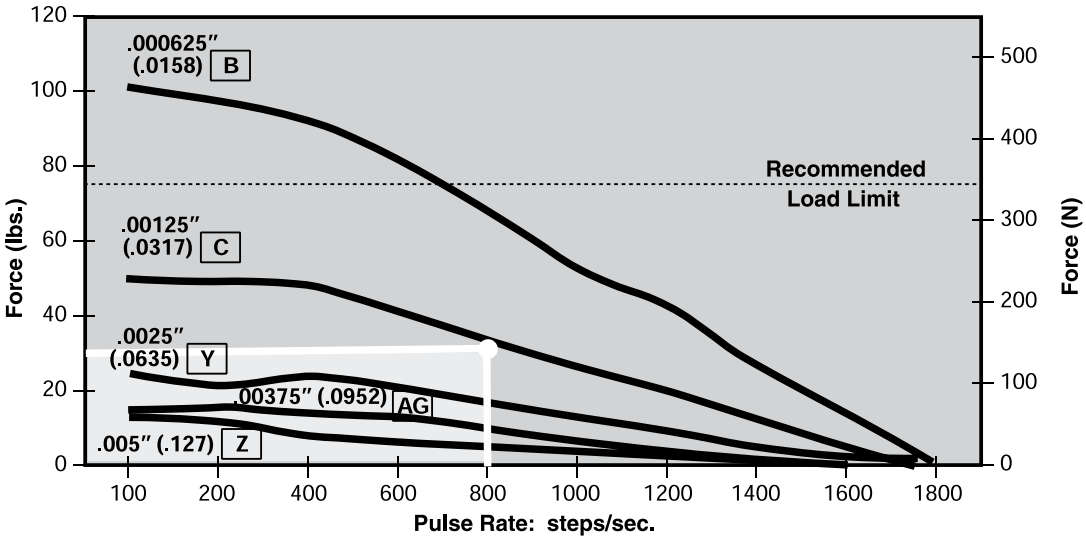

Resolution, Accuracy, and Repeatability – What's The Difference??

In any linear motion application, the subject of resolution, accuracy, and repeatability inevitability comes up. These terms have very different meanings, but are in many cases, used interchangeably.

Resolution

This is defined as the incremental distance the actuator's output shaft will extend per input pulse.

Resolution is expressed as inches/step. As seen in the curves above, resolutions are available in fractions or subfractions of an inch per step allowing very controlled linear motion.

Resolution = (screw lead) / (360 deg / step angle)

Example: Screw lead = 0.096-in / rev (inch / revolution)
Step angle = 1.8 deg / step

Actuator Resolution = (0.096 in / rev) / (360 deg / (1.8 deg / step) = 0.00048 in / step (use **"J" screw**)

Accuracy

The difference between the theoretical distance and the actual distance traveled. Due to manufacturing tolerances in the individual components of the actuator, the actual travel will be slightly different. The tight design tolerances of the Haydon actuators allow this error to be very small, but nevertheless, it exists. See Figure 18.

For a Haydon™ hybrid linear actuator utilizing a screw with a 1-in lead, 360° of rotary motion will result in a theoretical 1-in stoke. In general, the tolerance of a Haydon Hybrid linear actuator with a 1-in move will be +/– 0.0005-in.

Repeatability

The range of positions attained when the actuator is commanded to approach the same target multiple times under identical conditions.

Example:

Allow the actuator to extend a commanded distance from its home position (starting point). Measure and record this distance and call it "x". Retract the actuator back to its home position. Command the actuator to repeatedly return to the commanded distance "x". The differences between the actual distances traveled and "x" is the repeatability.

Figure 18.

ACCURACY and REPEATABILITY

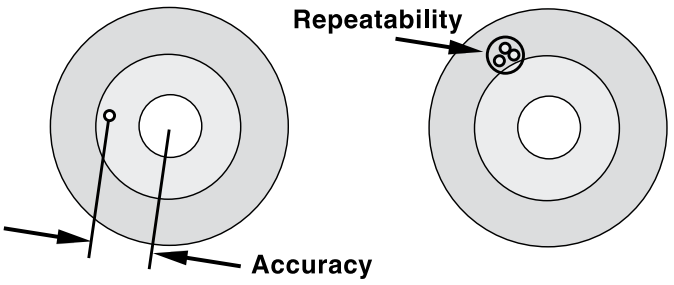

Resonance

Stepper motors have a natural resonant frequency as a result of the motor being a spring-mass system. When the step rate equals the motor's natural frequency, there may be an audible change in noise made by the motor, as well as an increase in vibration. The resonant point will vary with the application and load, but typically occurs somewhere between 100 and 250 steps per second. In severe cases the motor may lose steps at the resonant frequency. Changing the step rate is the simplest means of avoiding many problems related to resonance in a system. Also, half stepping or micro stepping usually reduces resonance problems. When accelerating/decelerating to speed, the resonance zone should be passed through as quickly as possible.

Selecting The Proper Motor-Checklist

In order to select the proper motor several factors must be considered. Is linear or rotary motion required? Following is a list of some of the basic requirements to consider when choosing a motor. This will help determine the best choice of an actuator or a rotary motor.

Rotary Motor	Linear Actuator
How much torque is required?	How much force is required?
What is the duty cycle?	What is the duty cycle?
What is desired step angle?	What is desired step increment?
What is the step rate or RPM?	What is the step rate or speed of travel?
Bipolar or unipolar coils?	Bipolar or unipolar coils?
Coil Voltage?	Coil Voltage?
Detent or holding torque requirements?	Must the screw hold position with power off or must it be "backdrivable"with power off?
Are there size restrictions?	Are there size restrictions?
What is anticipated life requirement?	What is anticipated life requirement?
Temperature of operating environment?	Temperature of operating environment?
Sleeve or ball bearings?	Captive or non-captive shaft?
Radial and axial load?	Type of driver?
Type of driver?	

Drives

Stepper motors require some external electrical components in order to run. These components typically include a power supply, logic sequencer, switching components and a clock pulse source to determine the step rate. Many commercially available drives have integrated these components into a complete package. Some basic drive units have only the final power stage without the controller electronics to generate the proper step sequencing.

Bipolar Drive

This is a very popular drive for a two phase bipolar motor having four leads. In a complete driver/controller the electronics alternately reverse the current in each phase. The stepping sequence is shown in figure 5.

Unipolar Drive

This drive requires a motor with a center-tap at each phase (6 leads). Instead of reversing the current in each phase, the drive only has to switch current from one coil to the other in each phase (figure 6). The windings are such that this switching reverses the magnetic fields within the motor. This option makes for a simpler drive but only half of the copper winding is used at any one time. This results in approximately 30% less available torque in a rotary motor or force in a linear actuator as compared to an equivalent bipolar motor.

L/R Drives

This type of drive is also referred to as a constant voltage drive. Many of these drives can be configured to run bipolar or unipolar stepper motors. L/R stands for the electrical relationship of inductance (L) to resistance (R). Motor coil impedance vs. step rate is determined by these parameters. The L/R drive should "match" the power supply output voltage to the motor coil voltage rating for continuous duty operation. Most published motor performance curves are based on full rated voltage applied at the motor leads. Power supply output voltage level must be set high enough to account for electrical drops within the drive circuitry for optimum continuous operation.

Performance levels of most steppers can be improved by increasing the applied voltage for shortened duty cycles. This is typically referred to as "over-driving" the motor. When over-driving a motor, the operating cycle must have sufficient periodic off time (no power applied) to prevent the motor temperature rise from exceeding the published specification.

Chopper Drives

A chopper drive allows a stepper motor to maintain greater torque or force at higher speeds than with an L/R drive. The chopper drive is a constant current drive and is almost always the bipolar type. The chopper gets its name from the technique of rapidly turning the output power on and off (chopping) to control motor current. For this setup, low impedance motor coils and the maximum voltage power supply that can be used with the drive will deliver the best performance. As a general rule, to achieve optimum performance, the recommended ratio between power supply and rated motor voltage is eight to one. An eight to one ratio was used for the performance curves in this catalog.

Microstepping Drives

Many bipolar drives offer a feature called microstepping. Microstepping electronically divides a full step into smaller steps. For instance, if one step of a linear actuator is 0.001 inch, this can be driven to have 10 microsteps per step. In this case, one microstep would normally be 0.0001 inch. Microstepping effectively reduces the step increment of a motor. However, the accuracy of each microstep has a larger percentage of error as compared to the accuracy of a full step. As with full steps, the incremental errors of microsteps are non-cumulative.

Summary

Stepper motors have been used in a wide array of applications for many years. With trends towards miniaturization, computer control and cost reduction, "hybrid" style stepper motor actuators are being used in an ever increasing range of applications. In particular the use of linear actuators has rapidly expanded in recent years. These precise, reliable motors can be found in many applications including blood analyzers and other medical instrumentation, automated stage lighting, imaging equipment, HVAC equipment, valve control, printing equipment, X-Y tables, integrated chip manufacturing, inspection and test equipment. This attractive technical solution eliminates the use of numerous components and the associated costs related to assembly, purchasing, inventory, etc. The applications for these motors are only limited by the designer's imagination.

Terminology

Detent or residual torque: The torque required to rotate the motor's output shaft with no current applied to the windings.

Drives: A term depicting the external electrical components to run a Stepper Motor System. This will include power supplies, logic sequencers, switching components and usually a variable frequency pulse source to determine the step rate.

Dynamic torque: The torque generated by the motor at a given step rate. Dynamic torque can be represented by PULL IN torque or PULL OUT torque.

Holding torque: The torque required to rotate the motor's output shaft while the windings are energized with a steady state D.C. current.

Inertia: The measure of a body's resistance to acceleration or deceleration. Typically used in reference to the inertia of the load to be moved by a motor or the inertia of a motor's rotor.

Linear step increment: The linear travel movement generated by the leadscrew with each single step of the rotor.

Maximum temperature rise: Allowable increase in motor temperature by design. Motor temperature rise is caused by the internal power dissipation of the motor as a function of load. This power dissipation is the sum total from I^2R (copper loss), iron (core) loss, and friction. The final motor temperature is the sum of the temperature rise and ambient temperature.

Pulse rate: The number of pulses per second (pps) applied to the windings of the motor. The pulse rate is equivalent to the motor step rate.

Pulses per second (PPS): The number of steps that the motor takes in one second (sometimes called "steps per second"). This is determined by the frequency of pulses produced by the motor drive.

Ramping: A drive technique to accelerate a given load from a low step rate, to a given maximum step rate and then to decelerate to the initial step rate without the loss of steps.

Single step response: The time required for the motor to make one complete step.

Step: The angular rotation produced by the rotor each time the motor receives a pulse. For linear actuators a step translates to a specific linear distance.

Step angle: The rotation of the rotor caused by each step, measured in degrees.

Steps per revolution: The total number of steps required for the rotor to rotate 360°.

Torque: The sum of the frictional load torque and inertial torque.

- **Pull out torque:** The maximum torque the motor can deliver once the motor is running at constant speed. Since there is no change in speed there is no inertial torque. Also, the kinetic energy stored in the rotor and load inertia help to increase the pull out torque.
- **Pull in torque:** The torque required to accelerate the rotor inertia and any rigidly attached external load up to speed plus whatever friction torque must be overcome. Pull in torque, therefore, is always less than pull out torque.

Torque to inertia ratio: Holding torque divided by rotor inertia.

Haydon Kerk Motion Solutions, Inc. • www.HaydonKerk.com • Phone: 800.243.2715 • International: 203.756.7441

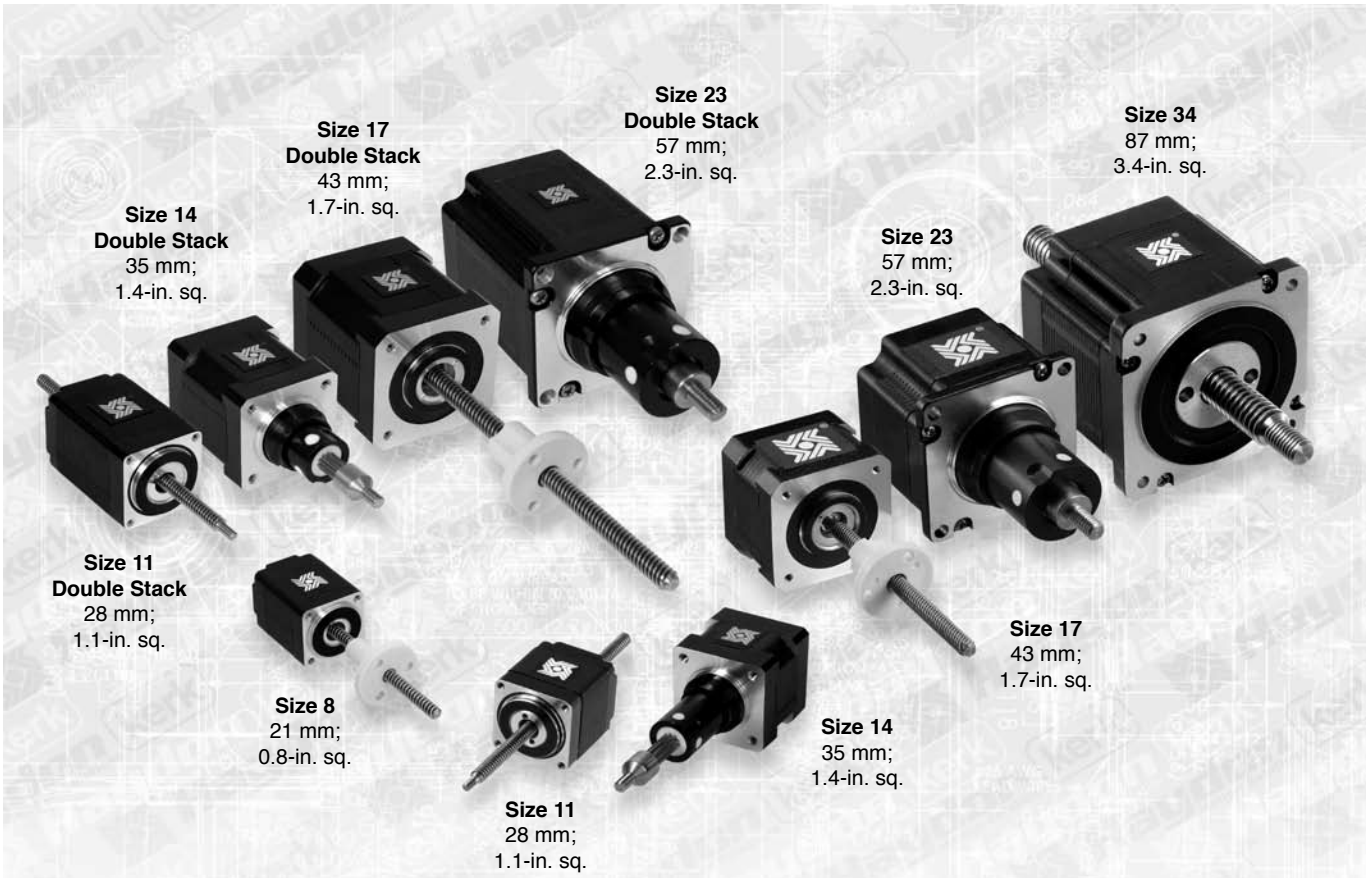

Haydon Kerk Motion Solutions, Inc. hybrid linear actuators open new avenues for equipment designers who require high performance and exceptional endurance in a very small package. The various patented designs use a proprietary manufacturing process, which incorporates engineering thermoplastics in the rotor drive nut and a stainless steel leadscrew. This allows the motor to be much quieter, more efficient and more durable than the v-thread and bronze nut configuration commonly used in other actuators. Motor life is improved more than 10 times over the traditional bronze nut style – and it requires no maintenance and does not affect the cost. An additional feature is the bearing preload adjustment which, unlike other designs, does not protrude from the motor configuration commonly used in other actuators.

The hybrid actuators come in six sizes, from 21 mm square to 87 mm square. Each size has three designs available – captive, non-captive and an external linear version. Haydon also offers a series of Double Stack enhanced performance hybrid linear actuators available in four sizes, from 28 mm to 57 mm square.

There are 28 different travels per step available, from .00006 inch (.001524 mm) to .005 inch (.127 mm). Micro stepping can be used for even finer resolution. Our 87 mm actuator delivers up to 500 pounds (2224 N) of force.

These linear actuators are ideal for applications requiring a combination of precise positioning, rapid motion and long life.

Typical applications include X-Y tables, medical equipment, semiconductor handling, telecommunications equipment, valve control, and numerous other uses. Sold at competitive prices, this product is an excellent value for incorporation into your next project. In addition to standard configurations, Haydon Kerk Motion Solutions can custom design these motors to meet your specific application needs. Lead time for standard prototype designs is usually 2 to 3 days, and 4 to 6 weeks for production orders.

Part Number Construction: Hybrids

Identifying the part number codes when ordering

E	43	H	4	N	–	05	–	910

Prefix
(only when using the following)

E = External
P = Proximity Sensor
S = Home Switch
T = High Temp

Series number designation:

43 = 43000

Available Hybrids:
21000
28000
35000
43000
57000
87000

Style

F = 1.8° Non captive
H = 1.8° Captive
H = 1.8° Captive (Use "E" prefix for "External")
J = 0.9° Non-captive
K = 0.9° Captive
K = 0.9° Captive (Use "E" prefix for "External")
L = 1.8° Double Stack, Non-captive
M = 1.8° Double Stack, Captive
M = 1.8° Double Stack, (Use "E" prefix for "External")

Coils

4 = Bipolar (4 wire)
6 = Unipolar (6 wire)

Code ID Resolution Travel/Step

(Example: N = travels .00012-in per step)

(Refer to travel / step chart found on each Series product page.)

Voltage

(Example: 05 = 5 VDC; 12 = 12 VDC) Custom V available

Suffix:

Stroke
Example: –910 = 1-in
(Refer to Stroke chart on Captive motor series product page.)

Suffix also represents:

–900 = External Linear with grease and flanged nut

–XXX = Special or custom
(Special part numbers for custom screw lengths and design options will require an issued 3 digit suffix number. Please contact our sales or applications engineering department for assistance.)

EXAMPLES:

E43H4N-05 = External linear actuator, 43000 series, 1.8 degree, Bipolar coils, .00012-in travel per step, 5 volt DC.

43H4N-05-910 = 43000 series, 1.8 degree captive linear actuator, Bipolar, .00012-in travel per step, 5 volt DC, 1.0-in stroke.

Bipolar

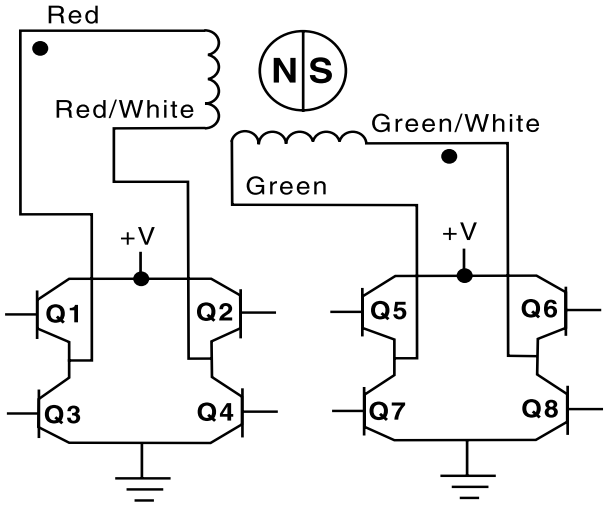

Unipolar

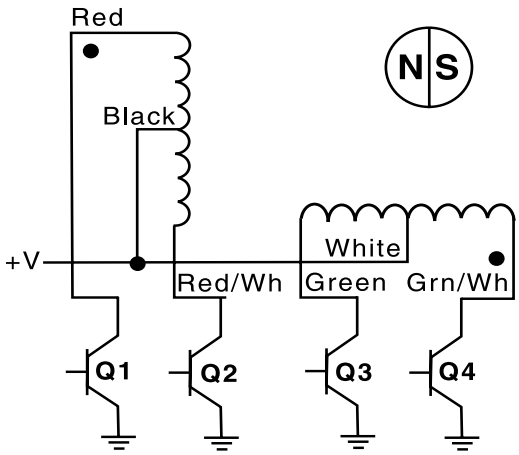

Hybrid Linear Actuator: Stepping Sequence

EXTEND CW ↓

Bipolar	Q2-Q3	Q1-Q4	Q6-Q7	Q5-Q8
Unipolar	Q1	Q2	Q3	Q4
Step				
1	ON	OFF	ON	OFF
2	OFF	ON	ON	OFF
3	OFF	ON	OFF	ON
4	ON	OFF	OFF	ON
1	ON	OFF	ON	OFF

RETRACT CCW ↑

Note: Half stepping is accomplished by inserting an off state between transitioning phases.

21000 Series: Size 8 Linear Actuator

Haydon Kerk Motion Solutions, Inc. • www.HaydonKerk.com • Phone: 800.243.2715 • International: 203.756.7441

One of the world's smallest linear actuators, the Size 8 precision motor is a recent addition to our extensive, award winning miniature stepper motor product line.

Equipment designers and engineers now have an even more compact option for their motion applications. The Haydon™ 21000 Series Size 8 linear actuator occupies a minimal 0.8" (21 mm) space and includes numerous patented innovations that provide customers high performance and endurance in a very small package.

Three designs are available, captive, non-captive and external linear versions. The 21000 Series is available in a wide variety of resolutions - from 0.00006" (.0015 mm) per step to 0.00157" (0.04 mm) per step. The Size 8 actuator delivers thrust of up to 10 lbs. (44 N).

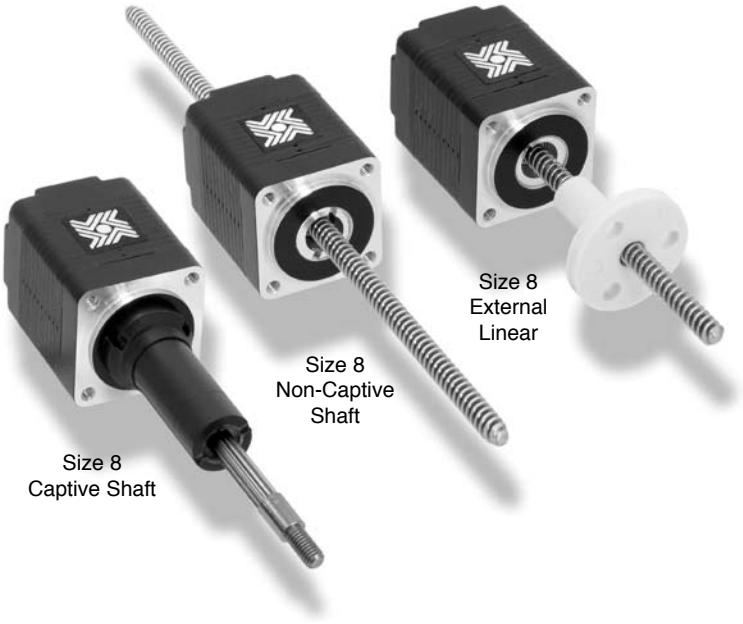

Salient Characteristics

Size 8: 21 mm (0.8-in) Hybrid Linear Actuator (1.8° Step Angle)				
Part No.	Captive	21H4(X)-V		
	Non-captive	21F4(X)-V		
	External Lin.	E21H4(X)-V		
Wiring		Bipolar		
Winding voltage		2.5 VDC	5 VDC	7.5 VDC
Current/phase		.49 A	.24 A	.16 A
Resistance/phase		5.1 Ω	20.4 Ω	45.9 Ω
Inductance/phase		1.5 mH	5.0 mH	11.7 mH
Power consumption		2.45 W Total		
Rotor inertia		1.4 gcm^2		
Temperature rise		135°F Rise (75°C Rise)		
Weight		1.5 oz (43 g)		
Insulation resistance		20 MΩ		

Linear Travel / Step Screw Ø.138"(3.50 mm) inches	mm	**Order Code I.D.**
.00006	.0015*	U
.000098*	.0025	AA
.00012	.0030*	N
.00019*	.005	AB
.00024	.006*	K
.00039*	.01	AC
.00048	.0121*	J
.00078*	.02	AD
.00157*	.04	AE

*Values truncated

Standard motors are Class B rated for maximum temperature of 130°C.

Special drive considerations may be necessary when leaving shaft fully extended or fully retracted.

Captive Leadscrew

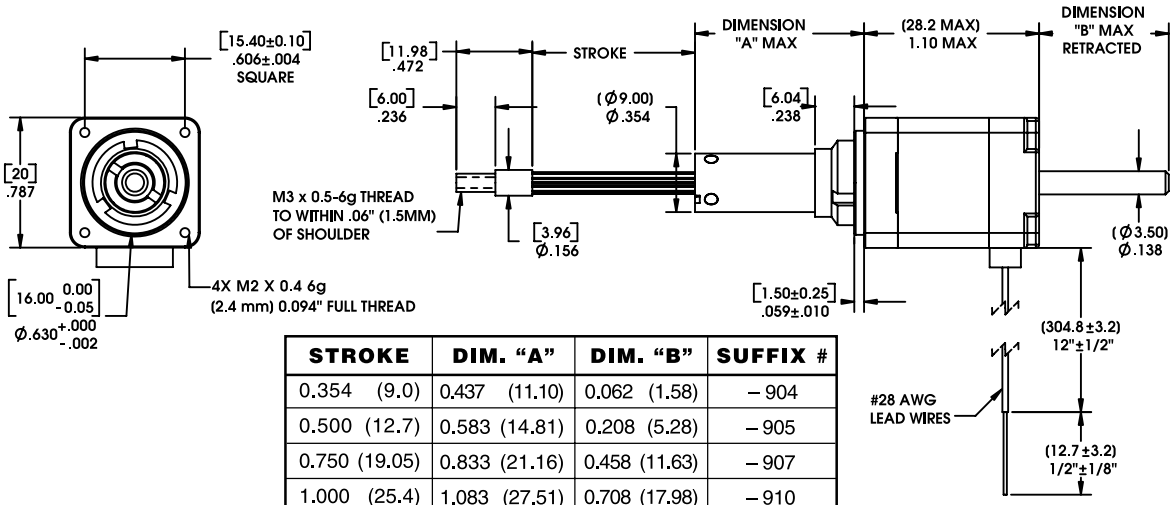

STROKE	DIM. "A"	DIM. "B"	SUFFIX #
0.354 (9.0)	0.437 (11.10)	0.062 (1.58)	– 904
0.500 (12.7)	0.583 (14.81)	0.208 (5.28)	– 905
0.750 (19.05)	0.833 (21.16)	0.458 (11.63)	– 907
1.000 (25.4)	1.083 (27.51)	0.708 (17.98)	– 910
1.250 (31.8)	1.333 (33.86)	0.958 (24.33)	– 912
1.500 (38.1)	1.583 (40.21)	1.208 (30.68)	– 915

Non-Captive Leadscrew

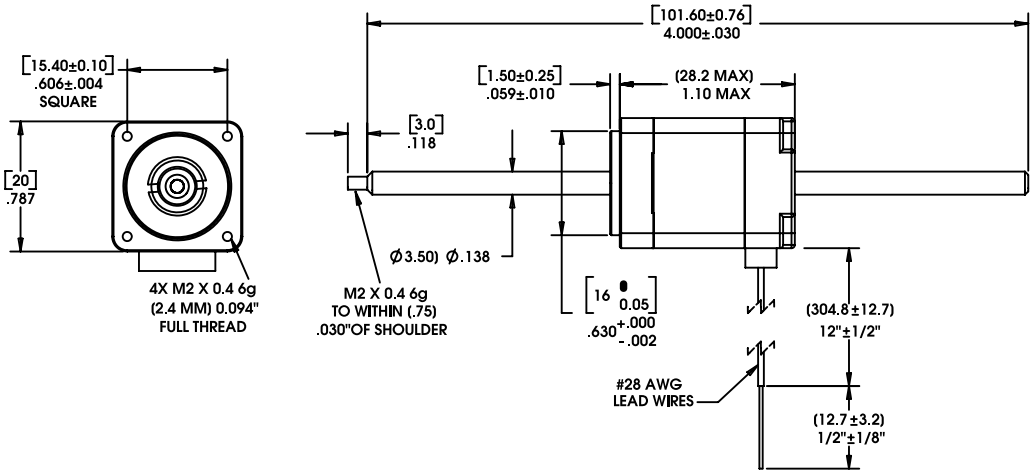

External Linear

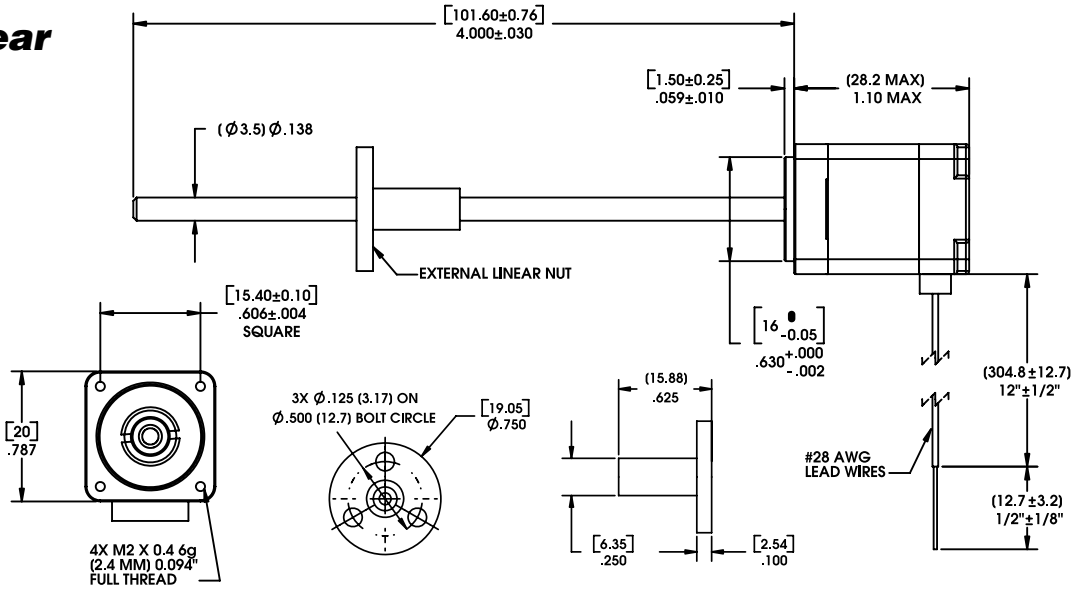

FORCE vs. PULSE RATE

Bipolar · Chopper · 100% Duty Cycle

Ø .138 (3.50) Leadscrew

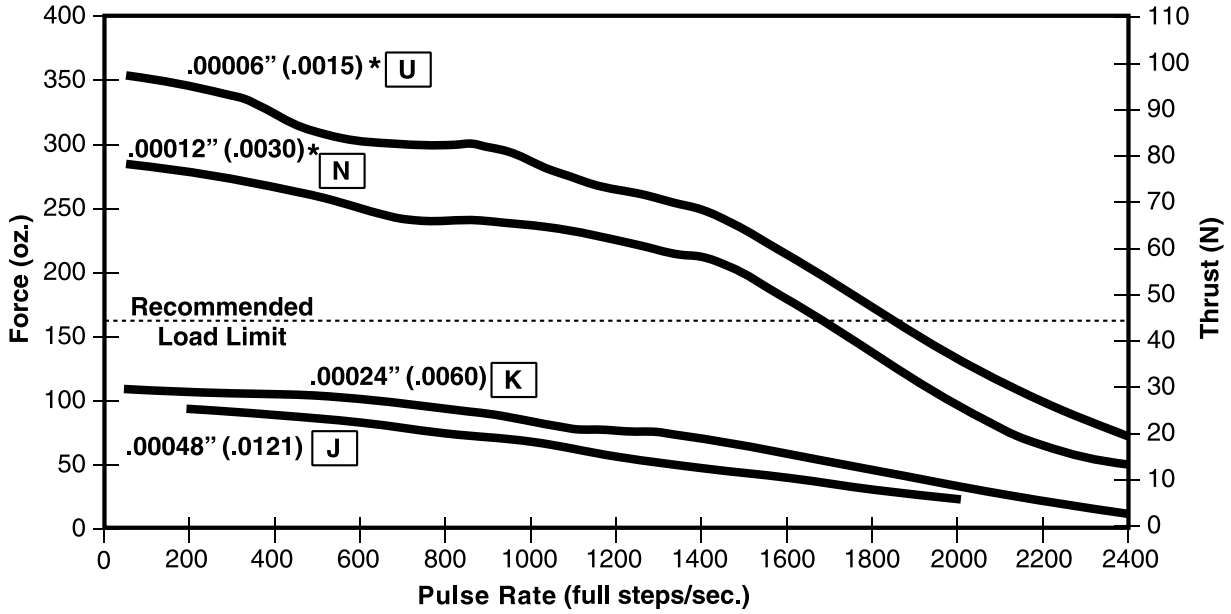

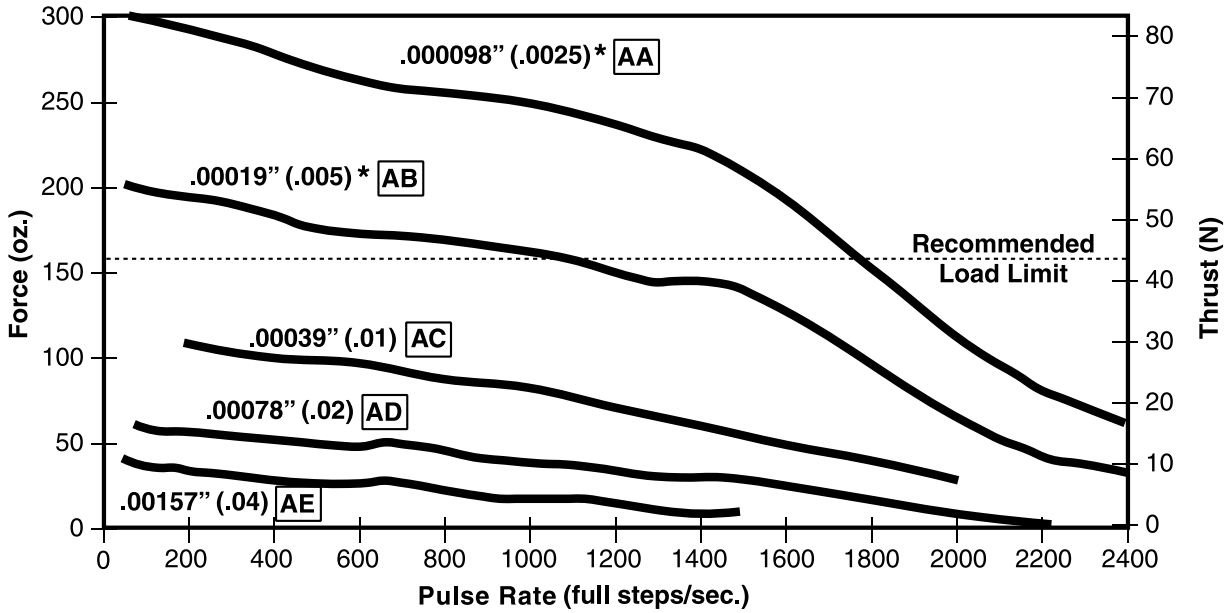

FORCE vs. LINEAR VELOCITY

Bipolar • Chopper • 100% Duty Cycle

Ø .138 (3.50) Leadscrew

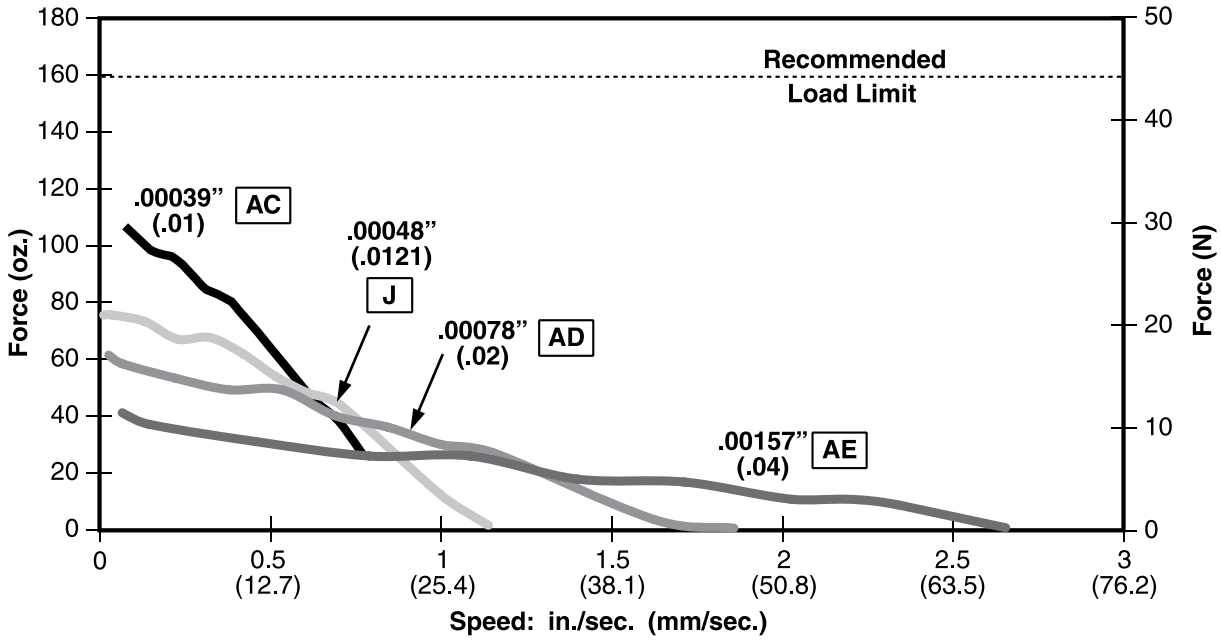

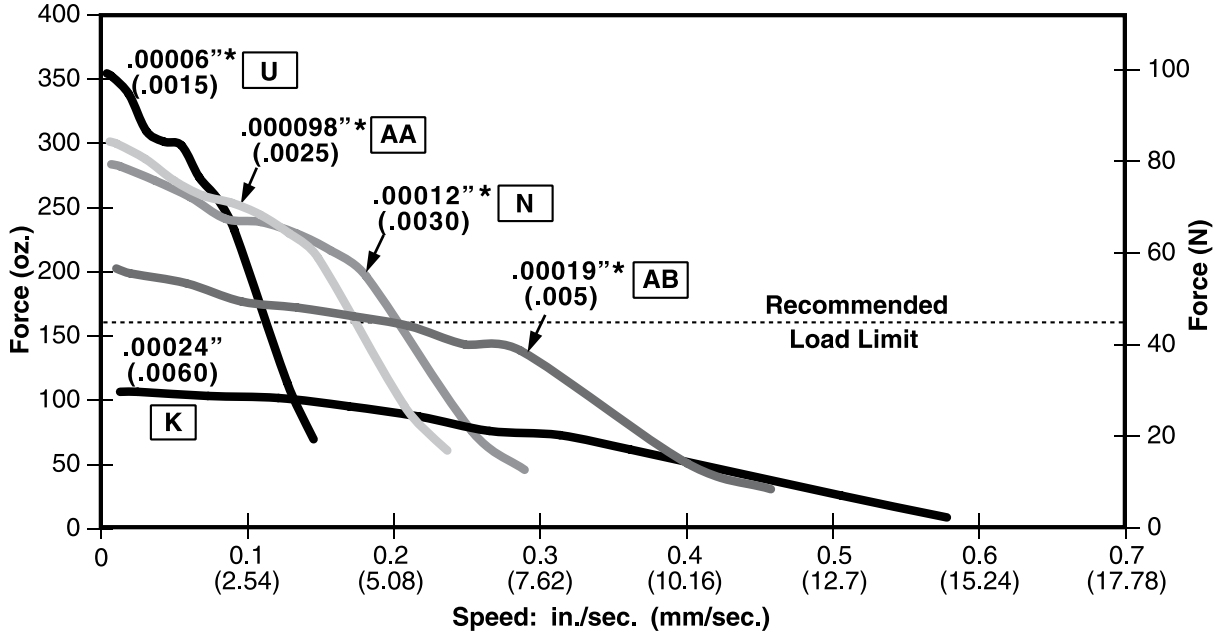

*Care should be taken when utilizing these screw pitches to ensure that the physical load limits of the motor are not exceeded. Please consult the factory for advice in selecting the proper pitch for your application.

NOTE: All chopper drive curves were created with a 5 volt motor and a 40 volt power supply.

Ramping can increase the performance of a motor either by increasing the top speed or getting a heavier load accelerated up to speed faster. Also, deceleration can be used to stop the motor without overshoot.

With L/R drives peak force and speeds are reduced, using a unipolar drive will yield a further 30% force reduction.

28000 Series: Size 11 Linear Actuator

Haydon Kerk Motion Solutions, Inc. • www.HaydonKerk.com • Phone: 800.243.2715 • International: 203.756.7441

Haydon™ brand Size 11 hybrid linear actuators offer compact, production-proven precision in motion.

The various patented designs deliver high performance, opening avenues for equipment designers who require performance and endurance in a very small package.

Three designs are available, captive, non-captive and external linear versions. The 28000 Series is available in a wide variety of resolutions - from 0.000125-in (.003175 mm) per step to 0.002-in (.0508 mm) per step. The Size 11 actuator delivers thrust of up to 20 lbs. (90 N).

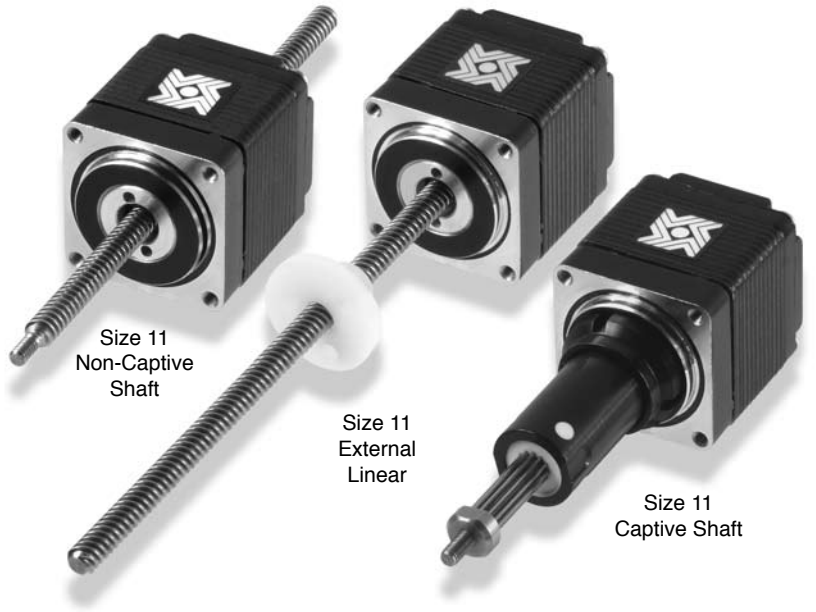

Salient Characteristics

Size 11: 28 mm (1.1-in) Hybrid Linear Actuator (1.8° Step Angle)						
Part No.	Captive	28H4(X)-V			28H6(X)-V	
	Non-captive	28F4(X)-V			28F6(X)-V	
	External Lin.	E28H4(X)-V			E28H6(X)-V	
Wiring		Bipolar			Unipolar**	
Winding voltage		2.1 VDC	5 VDC	12 VDC	5 VDC	12 VDC
Current/phase		1.0 A	0.42 A	0.18 A	0.42 A	0.18 A
Resistance/phase		2.1 Ω	11.9 Ω	68.6 Ω	11.9 Ω	68.6 Ω
Inductance/phase		1.5 mH	6.7 mH	39.0 mH	3.3 mH	19.5 mH
Power consumption		4.2 W				
Rotor inertia		9.0 gcm^2				
Temperature rise		135°F Rise (75°C Rise)				
Weight		4.2 oz (119 g)				
Insulation resistance		20 MΩ				

** Unipolar drive gives approximately 30% less thrust than bipolar drive.

Linear Travel / Step Screw Ø.1875"(4.76mm) inches	mm	Order Code I.D.
.000125	.0031*	7
.00025	.0063*	9
.0005	.0127	3
.001	.0254	1
.002	.0508	2

*Values truncated

Standard motors are Class B rated for maximum temperature of 130°C.

Special drive considerations may be necessary when leaving shaft fully extended or fully retracted.

Captive Leadscrew

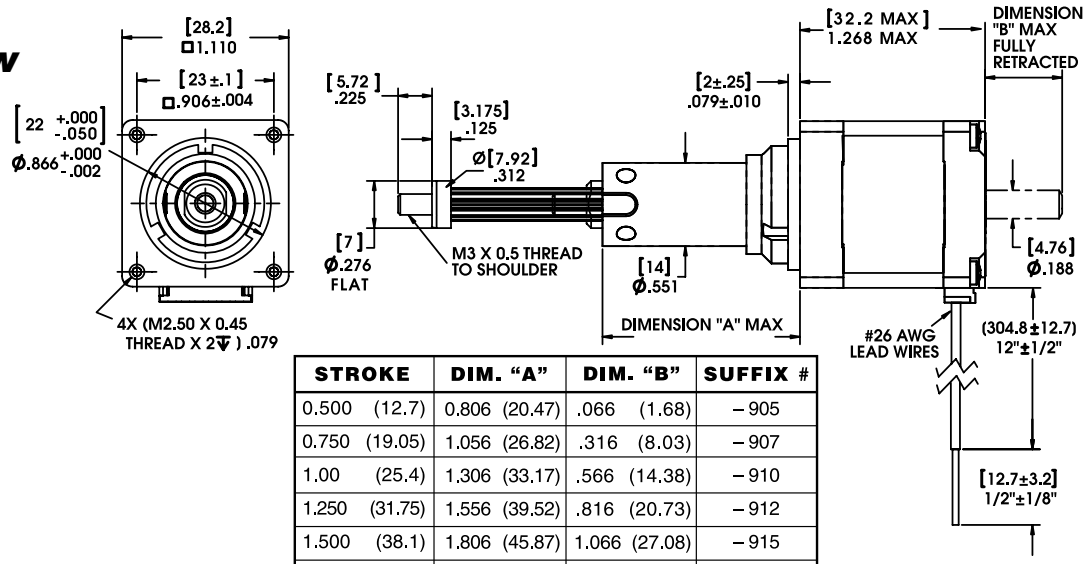

STROKE	DIM. "A"	DIM. "B"	SUFFIX #
0.500 (12.7)	0.806 (20.47)	.066 (1.68)	–905
0.750 (19.05)	1.056 (26.82)	.316 (8.03)	–907
1.00 (25.4)	1.306 (33.17)	.566 (14.38)	–910
1.250 (31.75)	1.556 (39.52)	.816 (20.73)	–912
1.500 (38.1)	1.806 (45.87)	1.066 (27.08)	–915
2.00 (50.8)	2.306 (58.57)	1.566 (39.78)	–920
2.500 (63.5)	2.806 (71.27)	2.066 (52.48)	–925

Integrated connector option, see page 95

Non-Captive Leadscrew

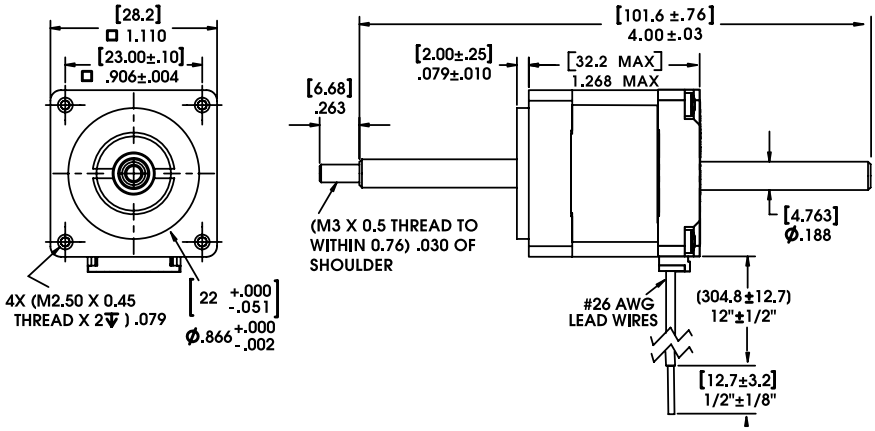

Integrated connector option, see page 95

External Linear

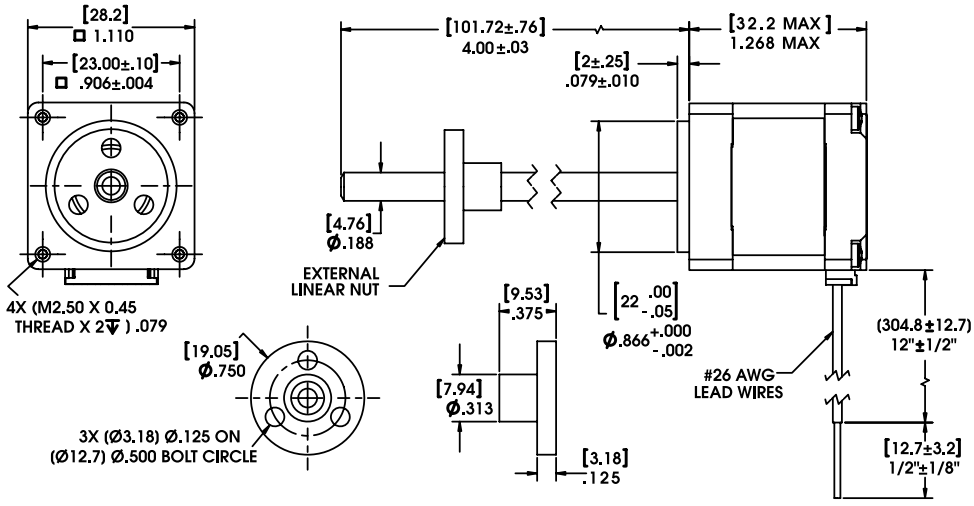

Integrated connector option, see page 95

28000 Series: Size 11 Performance Curves

FORCE vs. PULSE RATE

Bipolar • Chopper • 100% Duty Cycle

Ø .187 (4.75) Leadscrew

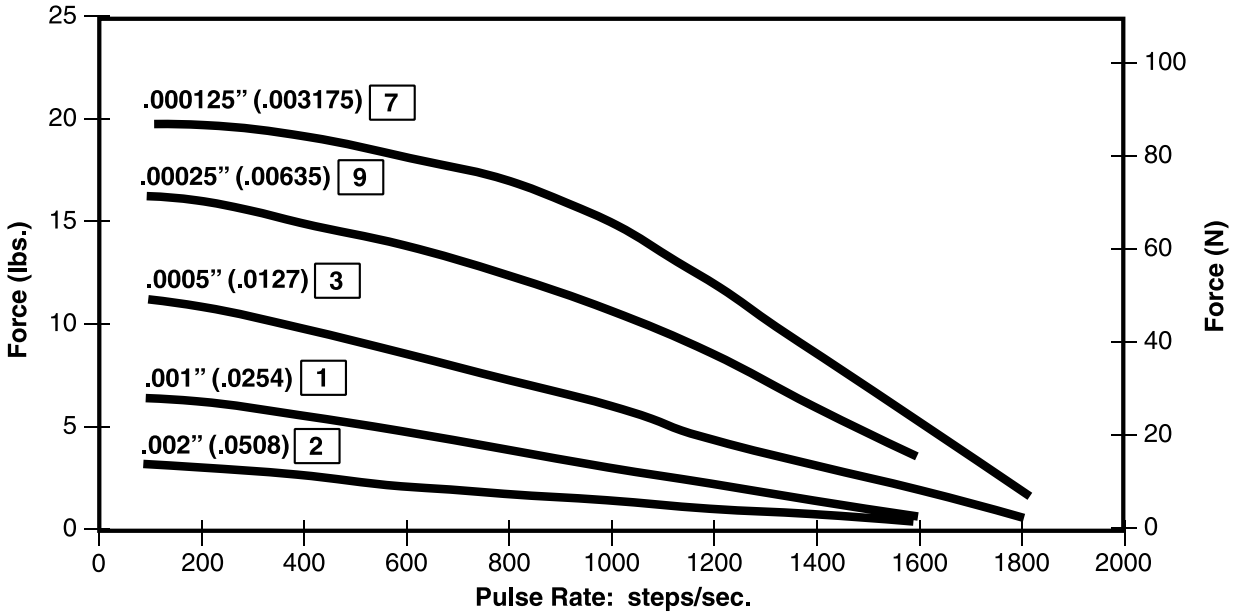

FORCE vs. LINEAR VELOCITY

Bipolar • Chopper • 100% Duty Cycle

Ø .187 (4.75) Leadscrew

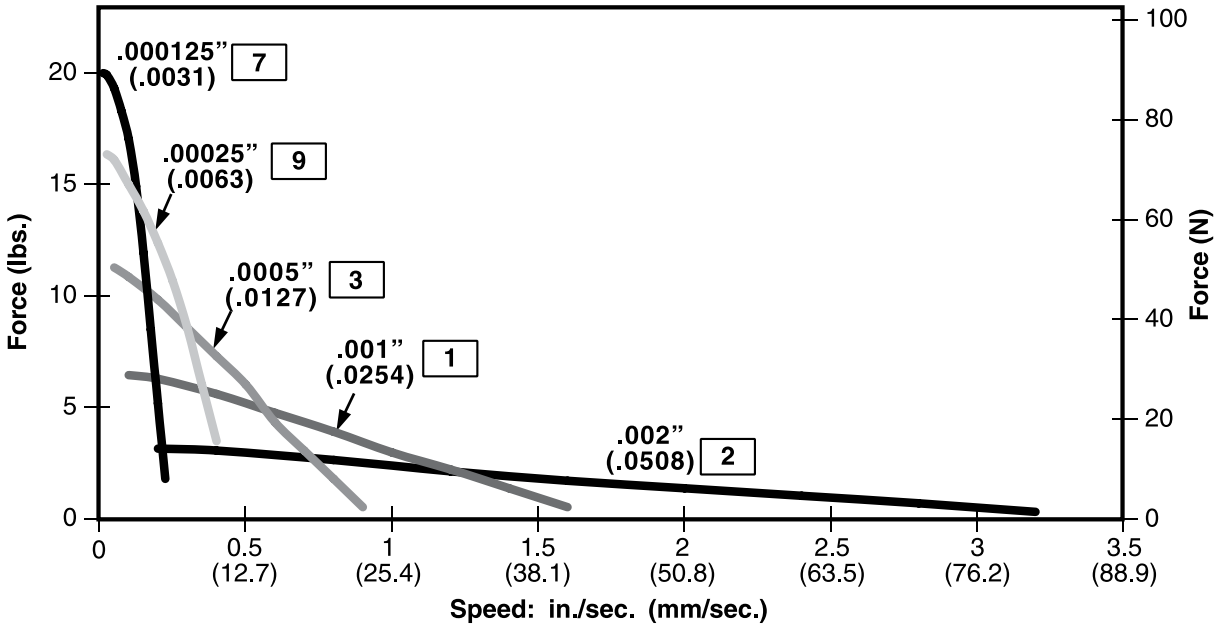

NOTE: All chopper drive curves were created with a 5 volt motor and a 40 volt power supply.

Ramping can increase the performance of a motor either by increasing the top speed or getting a heavier load accelerated up to speed faster. Also, deceleration can be used to stop the motor without overshoot.

With L/R drives peak force and speeds are reduced, using a unipolar drive will yield a further 30% force reduction.

Haydon™ 28000 Series Size 11 Double Stack hybrid linear actuators for enhanced performance.

Three designs are available, captive, non-captive and external linear versions. The 28000 Series is available in a wide variety of resolutions - from 0.000125" (.003175 mm) per step to 0.002" (.0508 mm) per step. The Size 11 actuator delivers thrust of up to 30 lbs. (133 N).

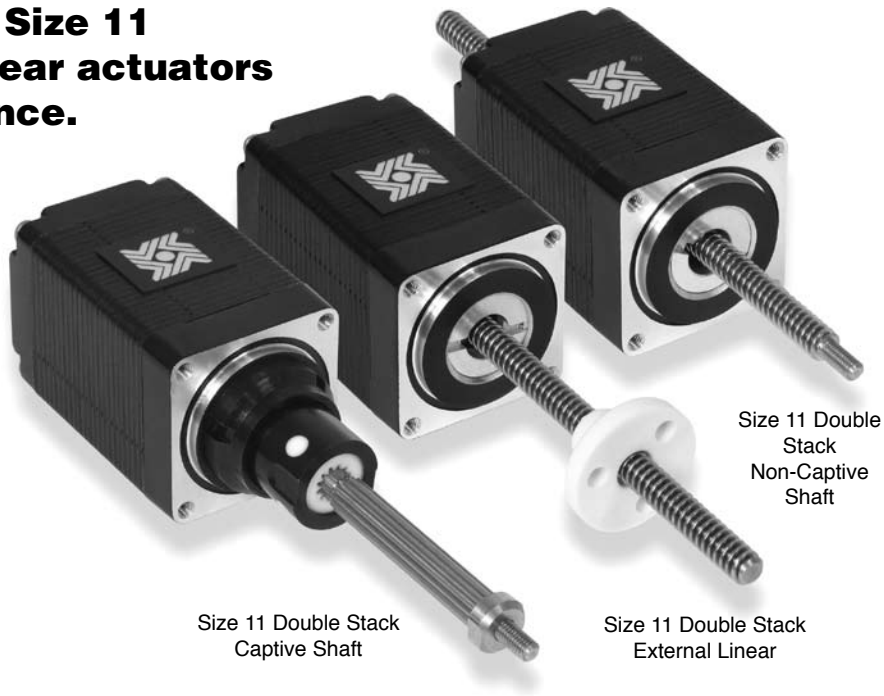

Size 11 Double Stack Non-Captive Shaft

Size 11 Double Stack Captive Shaft

Size 11 Double Stack External Linear

Salient Characteristics

Size 11: 28 mm (1.1-in) Double Stack Hybrid Linear Actuator (1.8° Step Angle)				
Part No.	Captive	28M4(X)-V		
	Non-captive	28L4(X)-V		
	External Lin.	E28M4(X)-V		
Wiring		Bipolar		
Winding voltage		2.1 VDC	5 VDC	12 VDC
Current/phase		1.9 A	750 mA	350 mA
Resistance/phase		1.1 Ω	6.7 Ω	34.8 Ω
Inductance/phase		1.1 mH	5.8 mH	35.6 mH
Power consumption		7.5 W Total		
Temperature rise		135°F Rise (75°C Rise)		
Weight		5.8 oz (180 g)		
Insulation resistance		20 MΩ		
Max. Load Limit		30 lbs (133 N)		

Linear Travel / Step Screw Ø.1875"(4.76mm) inches	mm	**Order Code I.D.**
.000125	.0031*	7
.00025	.0063*	9
.0005	.0127	3
.001	.0254	1
.002	.0508	2

*Values truncated

Standard motors are Class B rated for maximum temperature of 130°C.

Special drive considerations may be necessary when leaving shaft fully extended or fully retracted.

28000 Series:
Size 11 Double Stack Dimensional Drawings

Captive Leadscrew

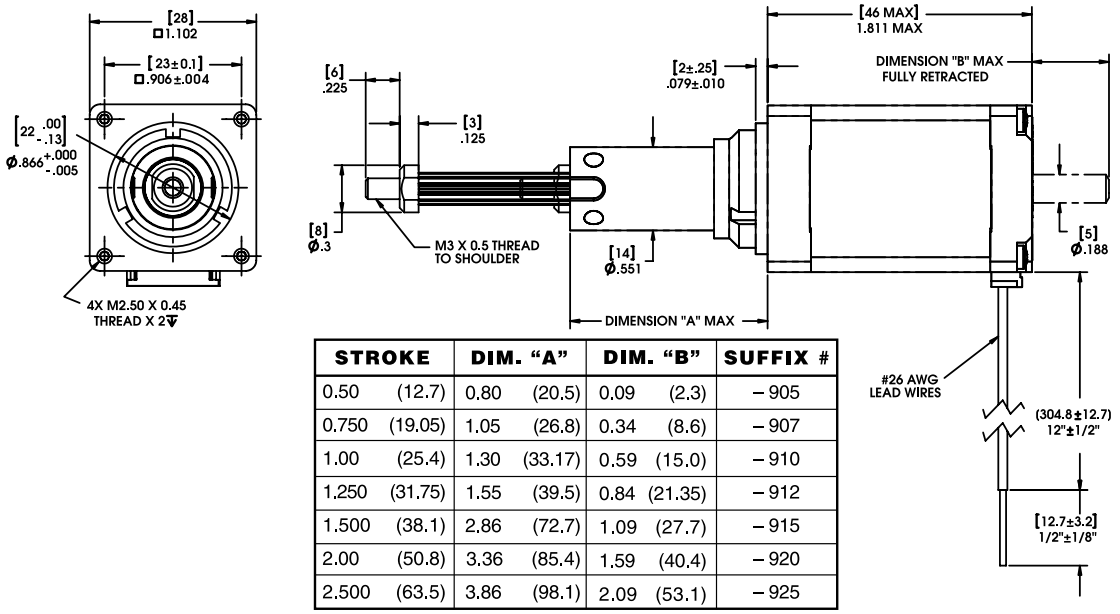

STROKE	DIM. "A"	DIM. "B"	SUFFIX #
0.50 (12.7)	0.80 (20.5)	0.09 (2.3)	– 905
0.750 (19.05)	1.05 (26.8)	0.34 (8.6)	– 907
1.00 (25.4)	1.30 (33.17)	0.59 (15.0)	– 910
1.250 (31.75)	1.55 (39.5)	0.84 (21.35)	– 912
1.500 (38.1)	2.86 (72.7)	1.09 (27.7)	– 915
2.00 (50.8)	3.36 (85.4)	1.59 (40.4)	– 920
2.500 (63.5)	3.86 (98.1)	2.09 (53.1)	– 925

Integrated connector option, see page 95

Non-Captive Leadscrew

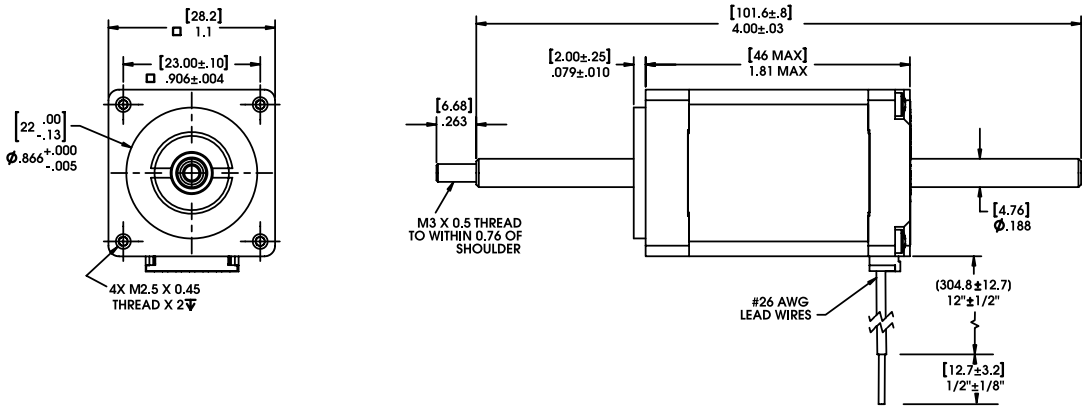

Integrated connector option, see page 95

External Linear

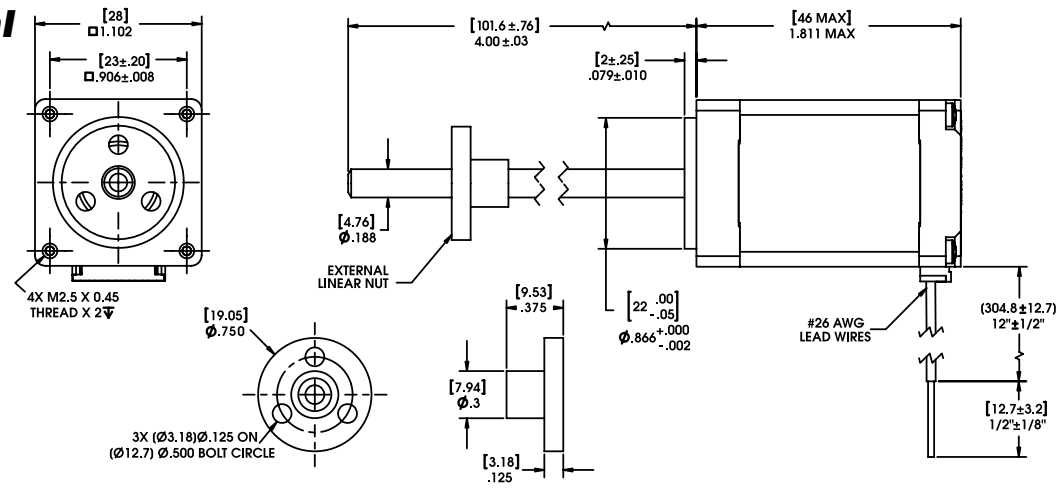

Integrated connector option, see page 95

FORCE vs. PULSE RATE

Bipolar • Chopper • 100% Duty Cycle

Ø .187 (4.75) Leadscrew

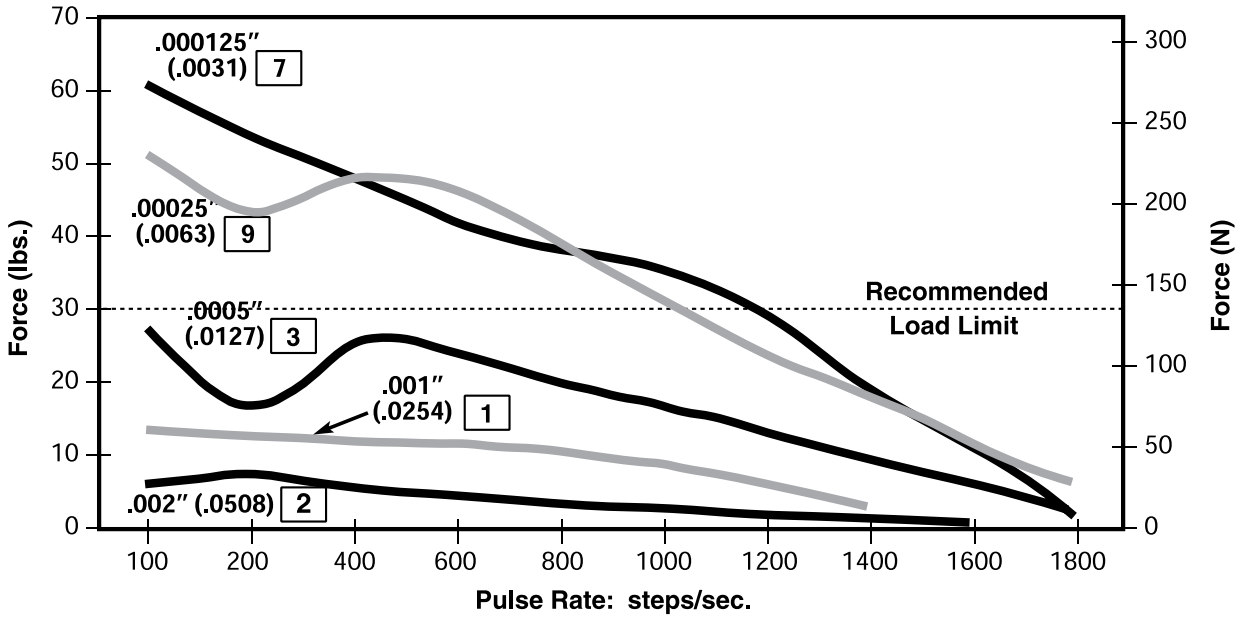

FORCE vs. LINEAR VELOCITY

Bipolar • Chopper • 100% Duty Cycle

Ø .187 (4.75) Leadscrew

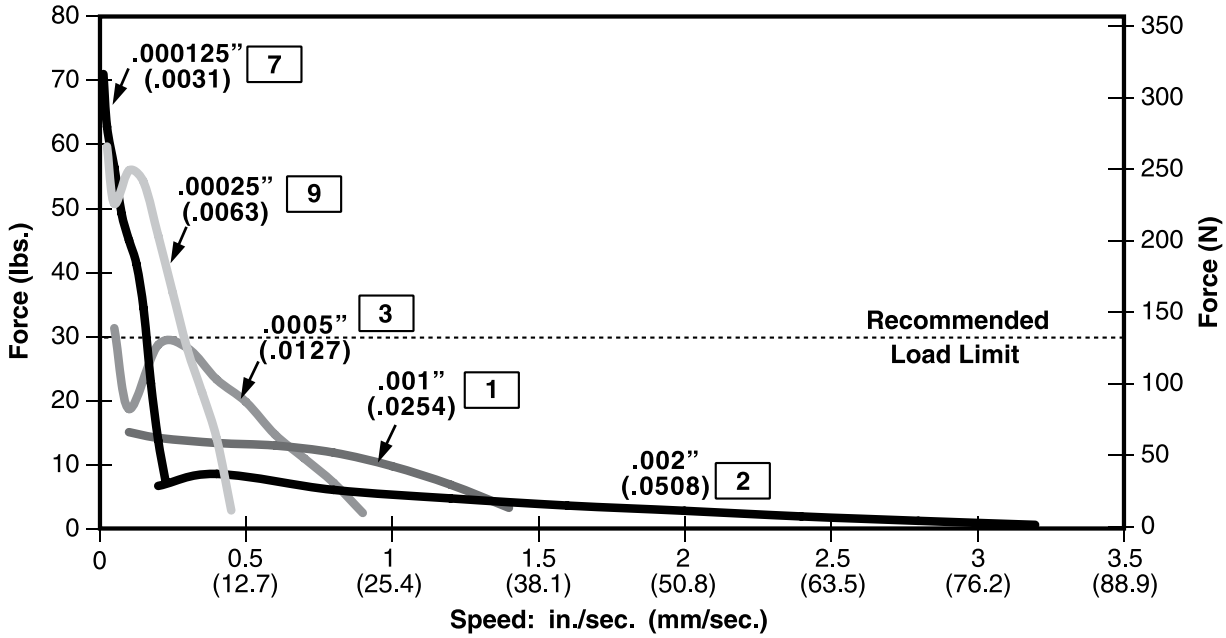

NOTE: All chopper drive curves were created with a 5 volt motor and a 40 volt power supply.

Ramping can increase the performance of a motor either by increasing the top speed or getting a heavier load accelerated up to speed faster. Also, deceleration can be used to stop the motor without overshoot.

With L/R drives peak force and speeds are reduced, using a unipolar drive will yield a further 30% force reduction.

35000 Series: Size 14 Linear Actuator

Haydon Kerk Motion Solutions, Inc. • www.HaydonKerk.com • Phone: 800.243.2715 • International: 203.756.7441

Haydon™ 35000 Series Size 14 hybrid linear actuators have been improved to provide higher force, longer life and improved performance.

The various patented designs deliver exceptional performance and new linear motion design opportunities. Three designs are available, captive, non-captive and external linear versions. The 35000 Series is available in a wide variety of resolutions - from 0.00012-in (.003048 mm) per step to 0.00192-in (.048768 mm) per step. The motors can also be microstepped for even finer resolutions. The Size 14 actuator delivers thrust of up to 50 lbs. (222 N).

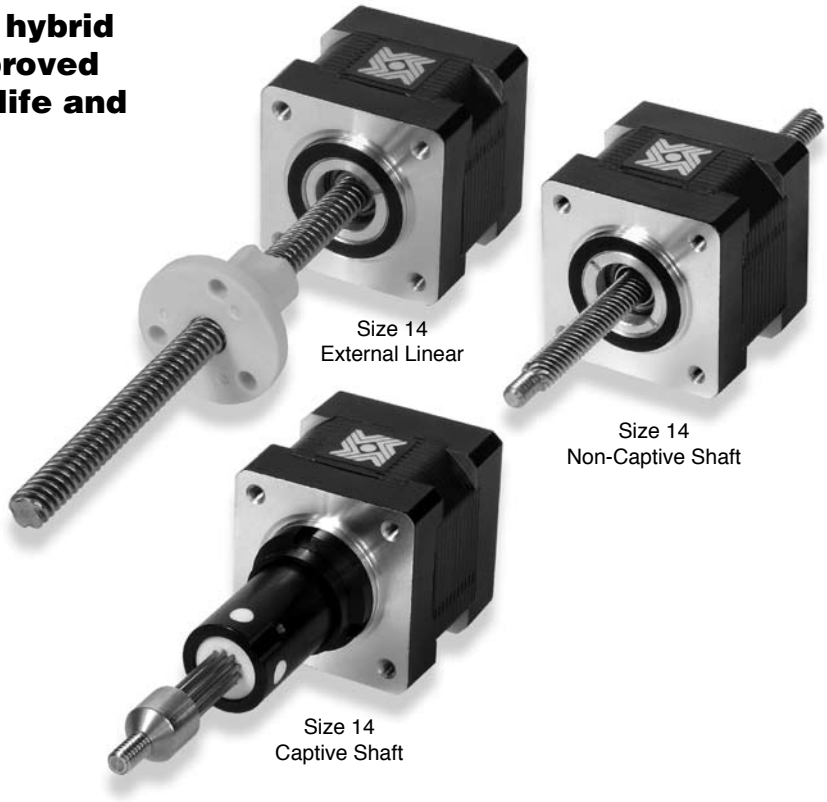

Size 14
External Linear

Size 14
Non-Captive Shaft

Size 14
Captive Shaft

Salient Characteristics

Size 14: 35 mm (1.4-in) Hybrid Linear Actuator (1.8° Step Angle)						
Part No.	Captive	35H4(X)-V			35H6(X)-V	
	Non-captive	35F4(X)-V			35F6(X)-V	
	External Lin.	E35H4(X)-V			E35H6(X)-V	
Wiring		Bipolar			Unipolar**	
Winding voltage		2.33 VDC	5 VDC	12 VDC	5 VDC	12 VDC
Current/phase		1.25 A	0.57 A	0.24 A	0.57 A	0.24 A
Resistance/phase		1.86 Ω	8.8 Ω	50.5 Ω	8.8 Ω	50.5 Ω
Inductance/phase		2.8 mH	13 mH	60 mH	6.5 mH	30 mH
Power consumption		5.7 W				
Rotor inertia		27.0 gcm^2				
Temperature rise		135°F Rise (75°C Rise)				
Weight		5.7 oz (162 g)				
Insulation resistance		20 MΩ				

** Unipolar drive gives approximately 30% less thrust than bipolar drive.

Linear Travel / Step

Screw Ø .218" (5.54 mm) inches	mm	Order Code I.D.	Screw Ø .250" (6.35 mm) inches	mm	Order Code I.D.
.00012	.0030*	N	.00015625	.0039*	P
.00024	.0060*	K	.0003125	.0079*	A
.00048	.0121*	J	.000625	.0158*	B
.00096	.0243*	Q	.00125	.0317*	C
.00192	.0487*	R			

*Values truncated

Standard motors are Class B rated for maximum temperature of 130°C.

Special drive considerations may be necessary when leaving shaft fully extended or fully retracted.

Captive Leadscrew

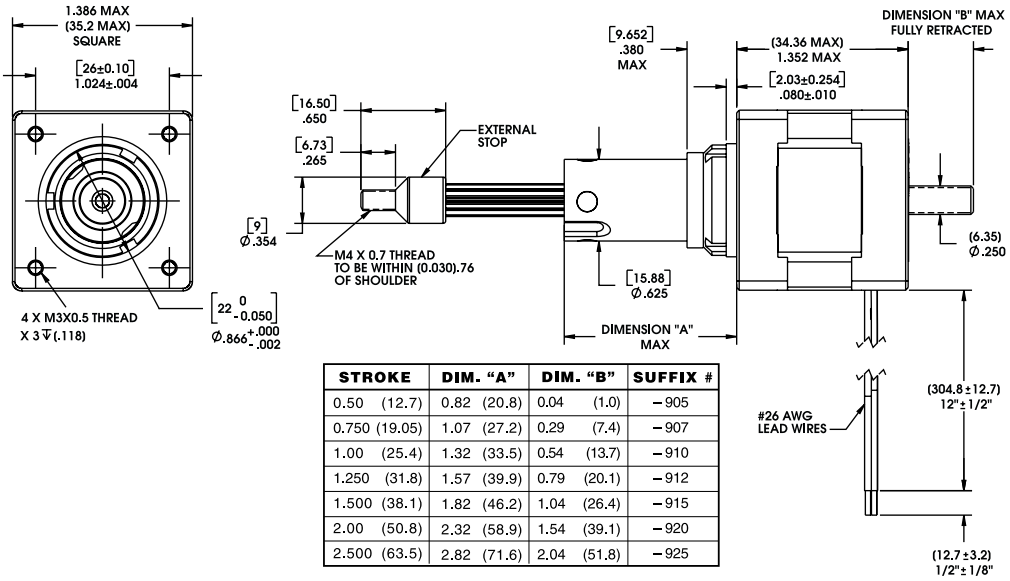

STROKE	DIM. "A"	DIM. "B"	SUFFIX #
0.50 (12.7)	0.82 (20.8)	0.04 (1.0)	–905
0.750 (19.05)	1.07 (27.2)	0.29 (7.4)	–907
1.00 (25.4)	1.32 (33.5)	0.54 (13.7)	–910
1.250 (31.8)	1.57 (39.9)	0.79 (20.1)	–912
1.500 (38.1)	1.82 (46.2)	1.04 (26.4)	–915
2.00 (50.8)	2.32 (58.9)	1.54 (39.1)	–920
2.500 (63.5)	2.82 (71.6)	2.04 (51.8)	–925

Integrated connector option, see page 95

Non-Captive Leadscrew

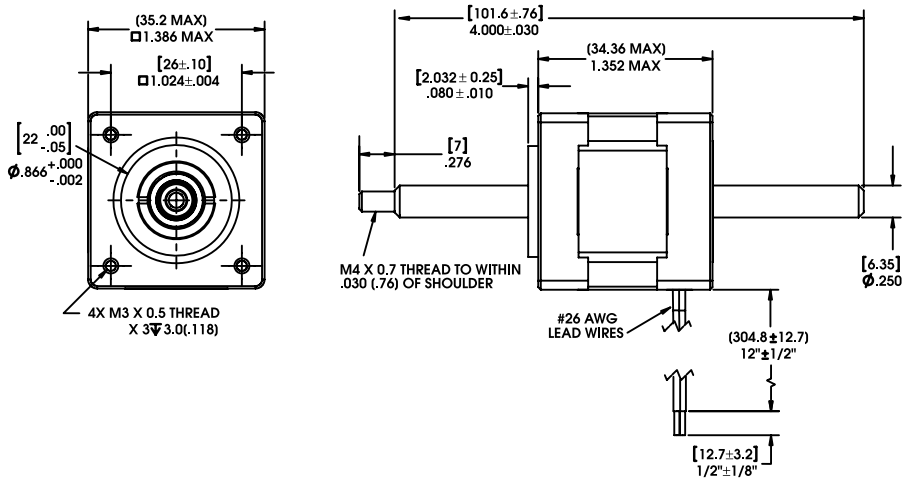

Integrated connector option, see page 95

External Linear

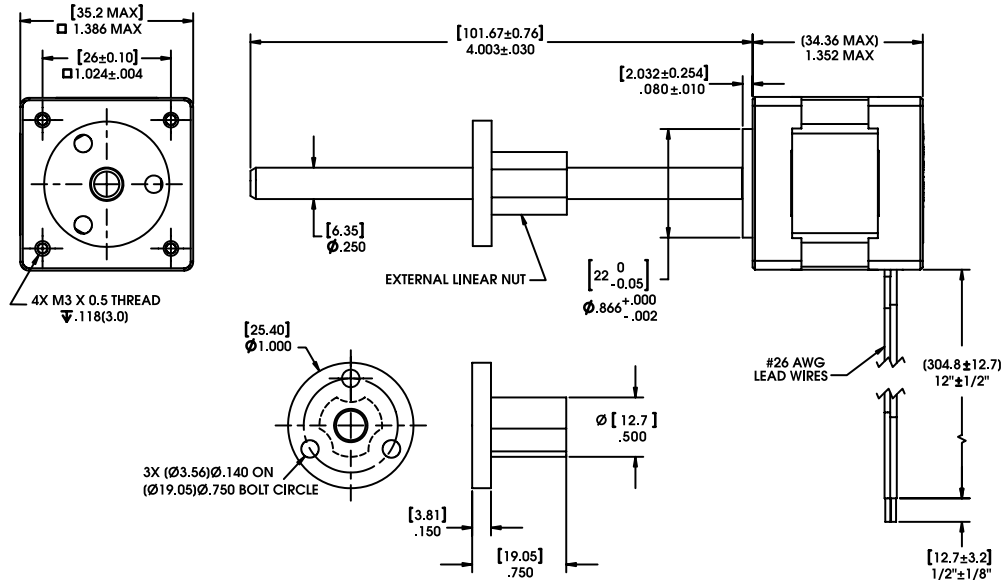

Integrated connector option, see page 95

FORCE vs. PULSE RATE

Bipolar · Chopper · 100% Duty Cycle

Ø .218 (5.54) Leadscrew

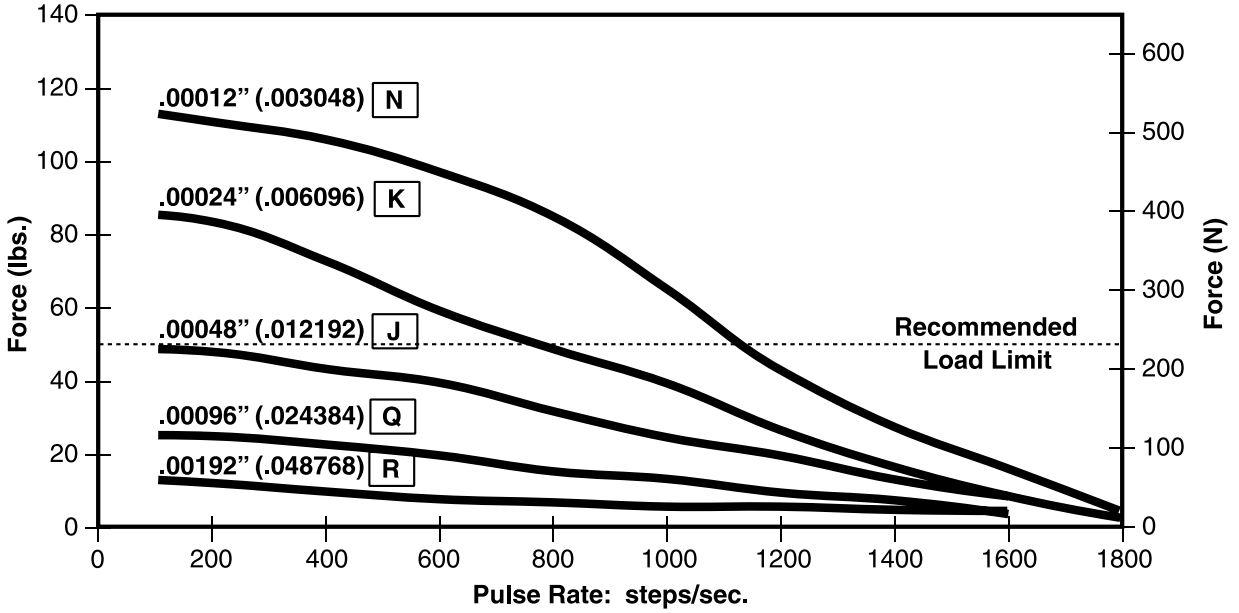

Ø .250 (6.35) Leadscrew

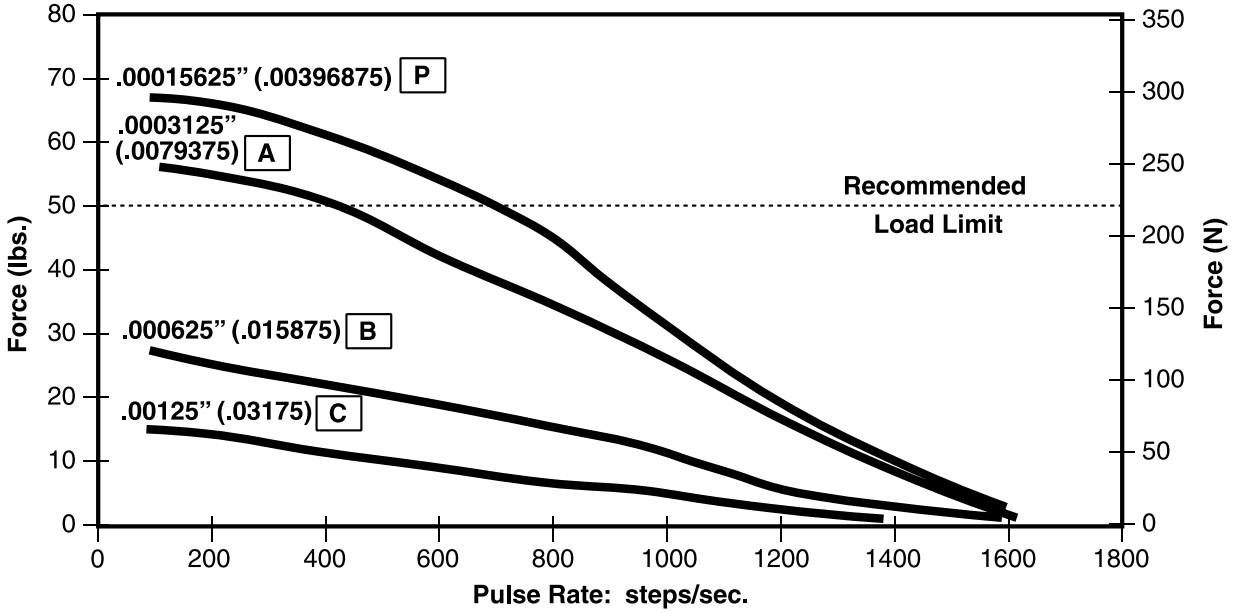

FORCE vs. LINEAR VELOCITY

Bipolar • Chopper • 100% Duty Cycle

Ø .218 (5.54) Leadscrew

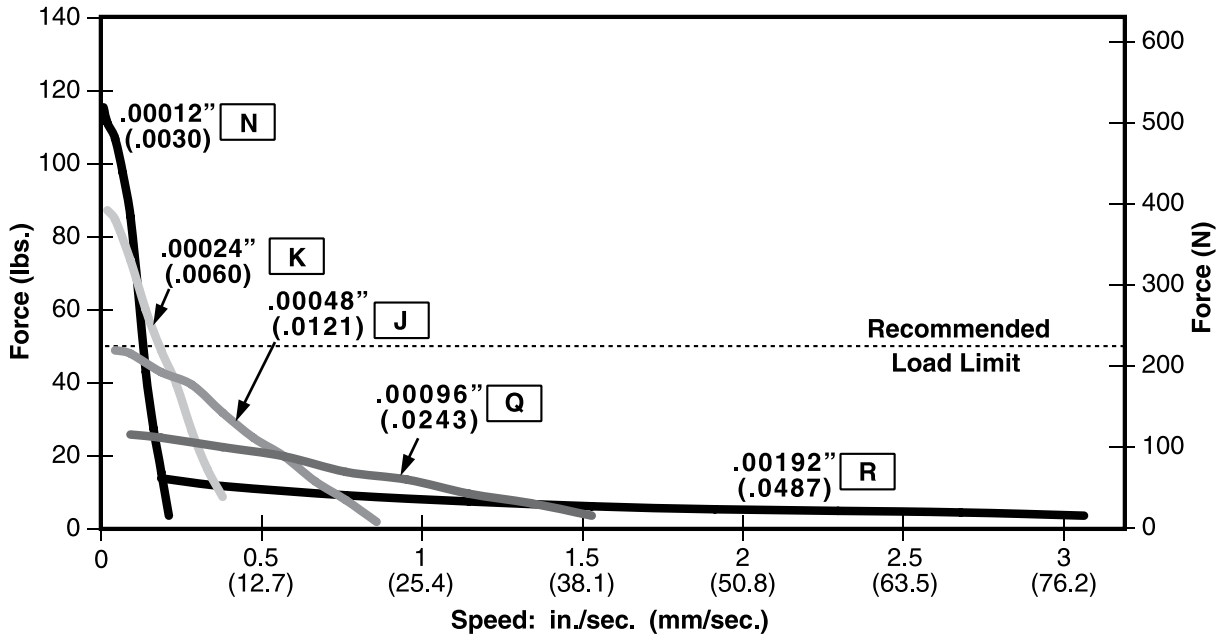

Ø .250 (6.35) Leadscrew

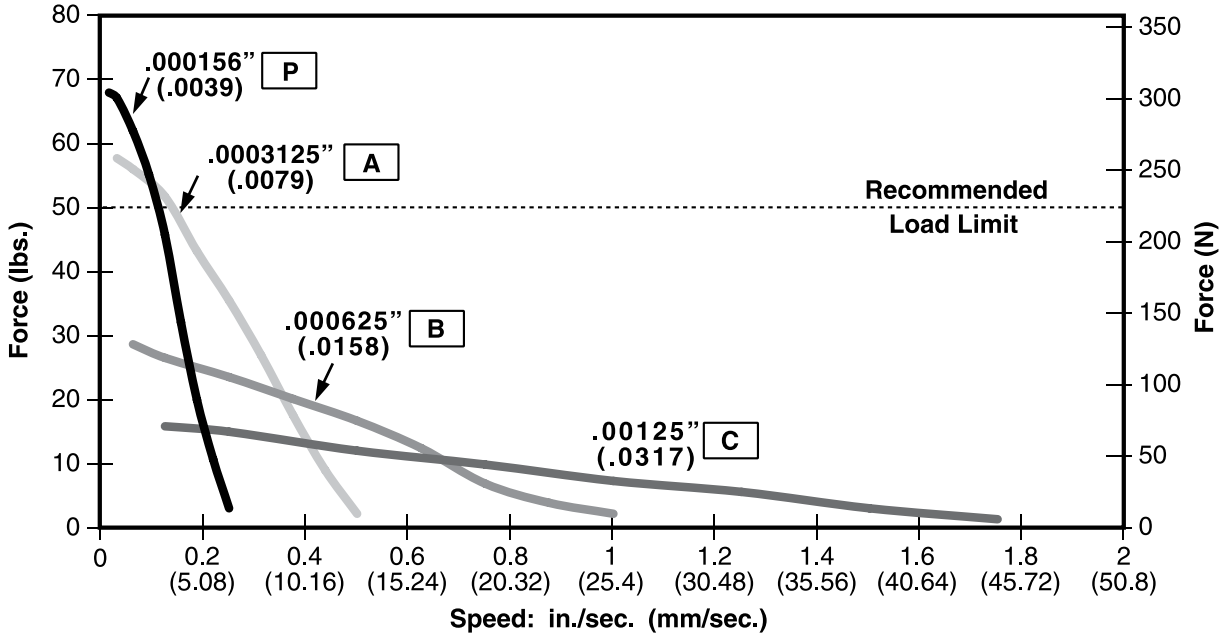

NOTE: All chopper drive curves were created with a 5 volt motor and a 40 volt power supply.

Ramping can increase the performance of a motor either by increasing the top speed or getting a heavier load accelerated up to speed faster. Also, deceleration can be used to stop the motor without overshoot.

With L/R drives peak force and speeds are reduced, using a unipolar drive will yield a further 30% force reduction.

35000 Series:
Size 14 High Resolution Linear Actuator

Haydon Kerk Motion Solutions, Inc. • www.HaydonKerk.com • Phone: 800.243.2715 • International: 203.756.7441

Precision step movement down to 1.5 micron with up to 50 lbs (222 N) force.

The Haydon™ 35000 Series Size 14, 0.9° high resolution (standard resolution = 1.8°) motor has been engineered to precisely deliver reliable high speed, force, up to 50 lbs (222 N), as well as a full step movement as low as 1.5 microns. These compact units provide a cost effective solution for engineers requiring positional accuracy and high speed linear travel. Haydon can custom design this motor for virtually any customer specific application.

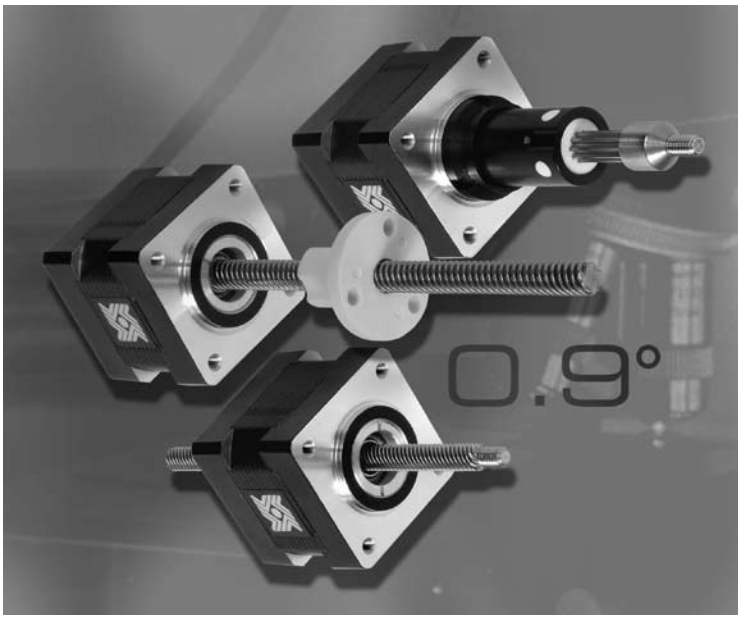

Salient Characteristics

Size 14: 35 mm (1.4-in) Hybrid Linear Actuator (0.9° Step Angle)						
Part No.	Captive	35K4(X)-V			35K6(X)-V	
	Non-captive	35J4(X)-V			35J6(X)-V	
	External Lin.	E35K4(X)-V			E35K6(X)-V	
Wiring		Bipolar			Unipolar**	
Winding voltage		2.33 VDC	5 VDC	12 VDC	5 VDC	12 VDC
Current/phase		1.25 A	0.57 A	0.24 A	0.57 A	0.24 A
Resistance/phase		1.86 Ω	8.8 Ω	50.5 Ω	8.8 Ω	50.5 Ω
Inductance/phase		2.8 mH	13 mH	60 mH	6.5 mH	30 mH
Power consumption		5.7 W				
Rotor inertia		27 gcm^2				
Temperature rise		135°F Rise (75°C Rise)				
Weight		5.7 oz (162 g)				
Insulation resistance		20 MΩ				

** Unipolar drive gives approximately 30% less thrust than bipolar drive.

Linear Travel / Step					
Screw Ø .218" (5.54 mm) inches	mm	**Order Code I.D.**	Screw Ø .250" (6.35 mm) inches	mm	**Order Code I.D.**
.00006	.0015*	U	.000078*	.00198*	V
.00012	.0030*	N	.00015625	.0039*	P
.00024	.0060*	K	.0003125	.0079*	A
.00048	.0121*	J	.000625	.0158*	B
.00096	.0243*	Q			

*Values truncated

Special drive considerations may be necessary when leaving shaft fully extended or fully retracted.

FORCE vs. PULSE RATE

Bipolar • Chopper • 100% Duty Cycle

Ø .218 (5.54) and Ø .250 (6.35) Leadscrews

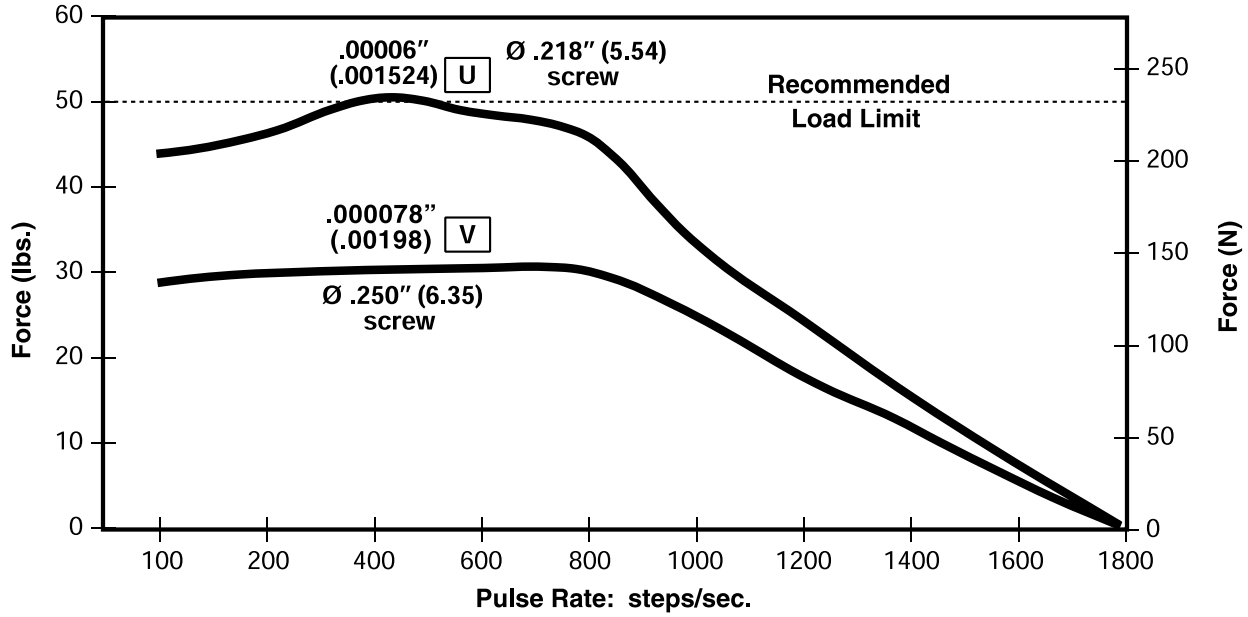

FORCE vs. LINEAR VELOCITY

Bipolar • Chopper • 100% Duty Cycle

Ø .218 (5.54) and Ø .250 (6.35) Leadscrews

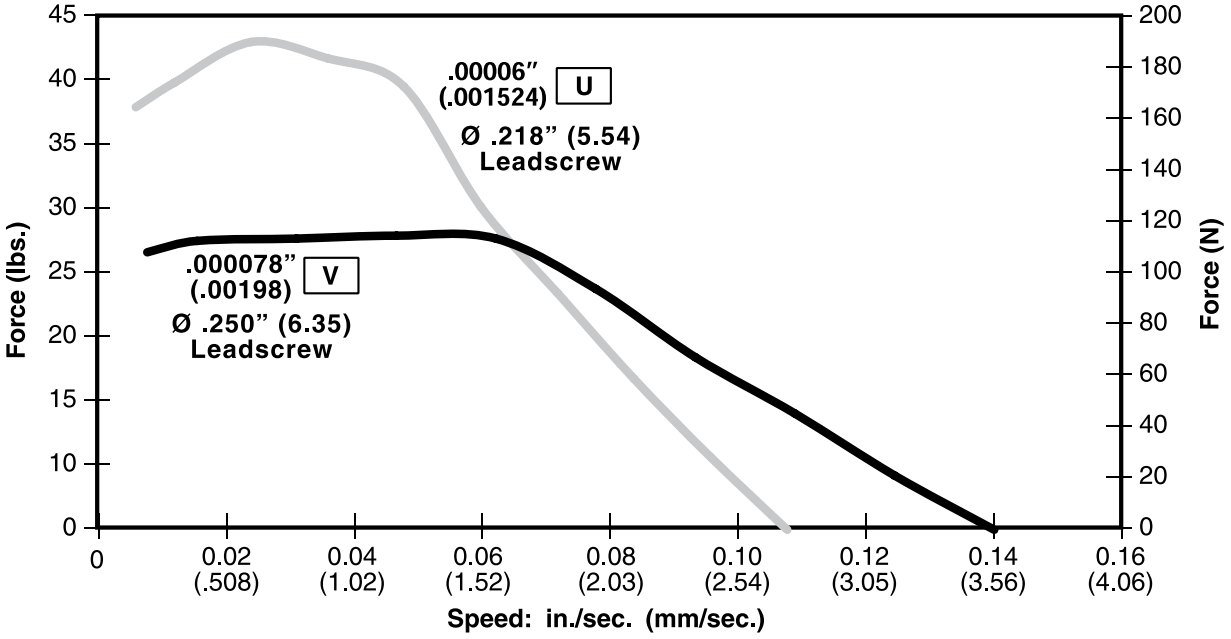

NOTE: All chopper drive curves were created with a 5 volt motor and a 40 volt power supply.

Ramping can increase the performance of a motor either by increasing the top speed or getting a heavier load accelerated up to speed faster. Also, deceleration can be used to stop the motor without overshoot.

With L/R drives peak force and speeds are reduced, using a unipolar drive will yield a further 30% force reduction.

35000 Series:
Size 14 Double Stack Linear Actuator

Haydon Kerk Motion Solutions, Inc. • www.HaydonKerk.com • Phone: 800.243.2715 • International: 203.756.7441

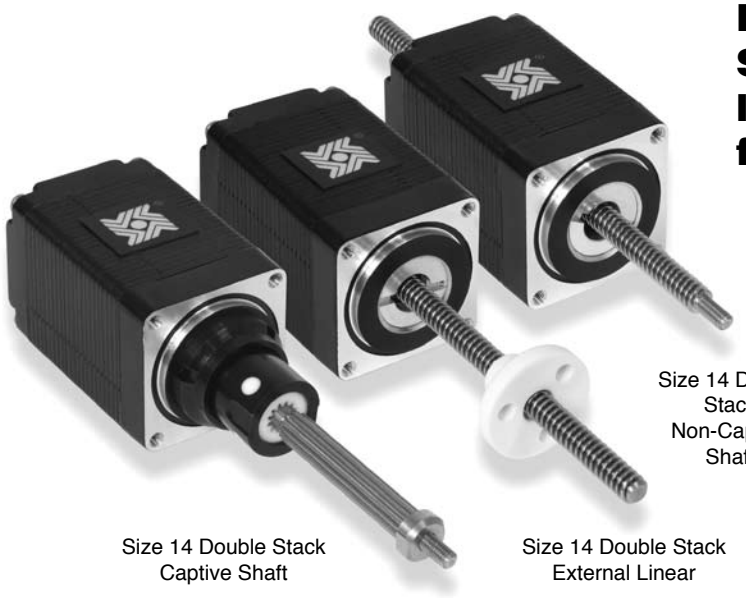

Size 14 Double Stack Non-Captive Shaft

Size 14 Double Stack Captive Shaft

Size 14 Double Stack External Linear

Haydon™ 35000 Series Size 14 Double Stack hybrid linear actuators have improve force and performance.

The various patented designs deliver exceptional performance and new linear motion design opportunities.

Three designs are available, captive, non-captive and external linear versions. The 35000 Series is available in a wide variety of resolutions - from 0.000625-in (.0158 mm) per step to 0.005-in (.127 mm) per step. The motors can also be microstepped for even finer resolutions. The Size 14 actuator delivers thrust of up to 50 lbs. (222 N).

Salient Characteristics

Size 14: 3 mm (1.4-in) Double Stack Hybrid Linear Actuator (1.8° Step Angle)				
Part No.	Captive	35M4(X)-V		
	Non-captive	35L4(X)-V		
	External Lin.	E35M4(X)-V		
Wiring		Bipolar		
Winding voltage		2.33 VDC	5 VDC	12 VDC
Current/phase		2 A	910 mA	380 mA
Resistance/phase		1.2 Ω	5.5 Ω	31.6 Ω
Inductance/phase		1.95 mH	7.63 mH	65.1 mH
Power consumption		9.1 W Total		
Temperature rise		135°F Rise (75°C Rise)		
Weight		8.5 oz (240 g)		
Insulation resistance		20 MΩ		
Max. Load Limit		50 lbs (222 N)		

Linear Travel / Step Screw Ø.250" (6.35 mm) inches	mm	**Order Code I.D.**
.000625	.0158*	B
.00125	.0317*	C
.0025	.0635	Y
.00375	.0953	AG
.005	.127	Z

*Values truncated

Standard motors are Class B rated for maximum temperature of 130°C.

Special drive considerations may be necessary when leaving shaft fully extended or fully retracted.

Captive Leadscrew

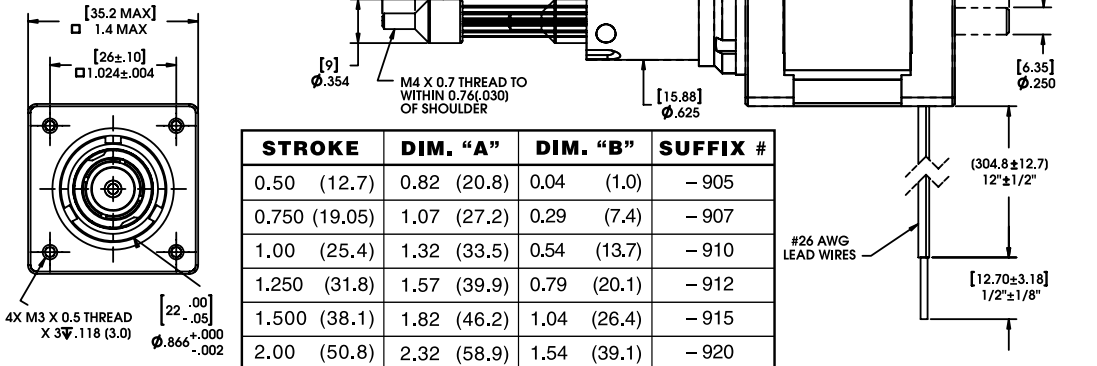

STROKE	DIM. "A"	DIM. "B"	SUFFIX #
0.50 (12.7)	0.82 (20.8)	0.04 (1.0)	– 905
0.750 (19.05)	1.07 (27.2)	0.29 (7.4)	– 907
1.00 (25.4)	1.32 (33.5)	0.54 (13.7)	– 910
1.250 (31.8)	1.57 (39.9)	0.79 (20.1)	– 912
1.500 (38.1)	1.82 (46.2)	1.04 (26.4)	– 915
2.00 (50.8)	2.32 (58.9)	1.54 (39.1)	– 920
2.500 (63.5)	2.82 (71.6)	2.04 (51.8)	– 925

Integrated connector option, see page 95

Non-Captive Leadscrew

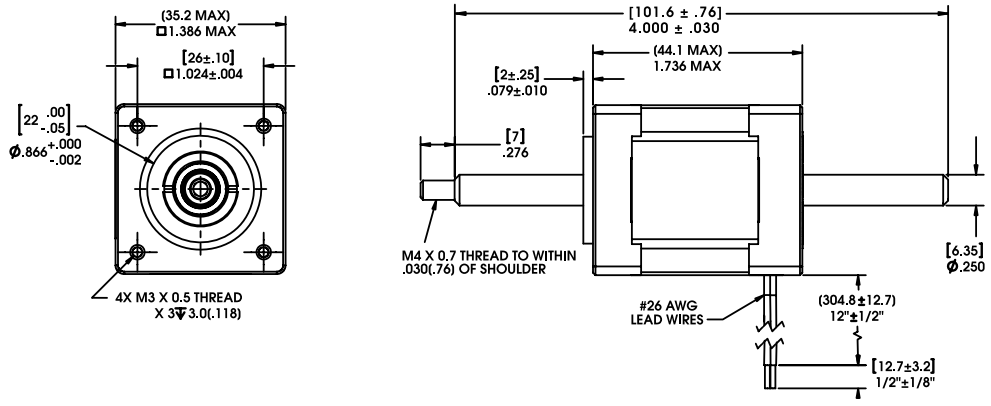

Integrated connector option, see page 95

External Linear

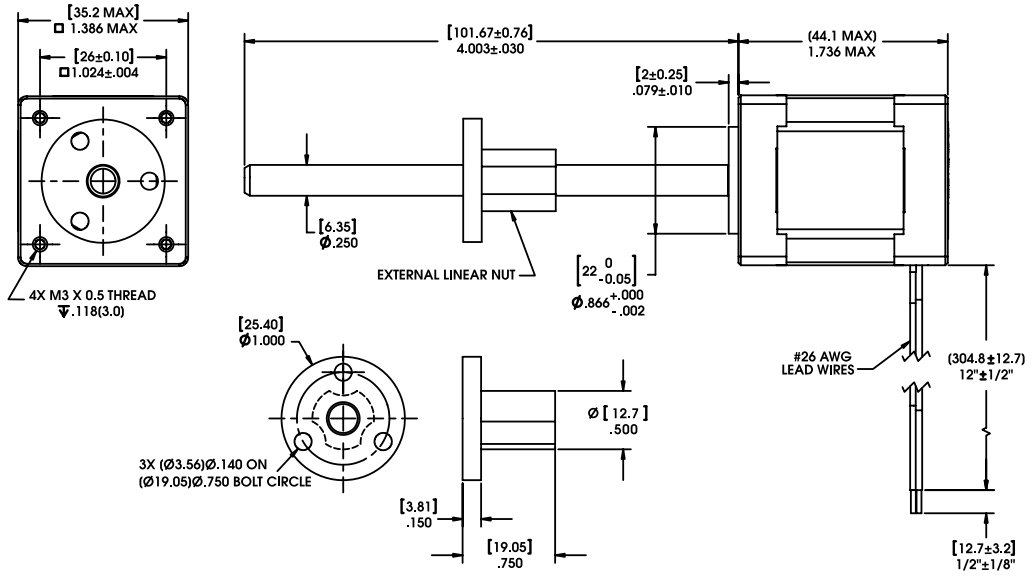

Integrated connector option, see page 95

35000 Series:
Size 14 Double Stack Performance Curves

FORCE vs. PULSE RATE

Bipolar • Chopper • 100% Duty Cycle

Ø .250 (6.35) Leadscrew

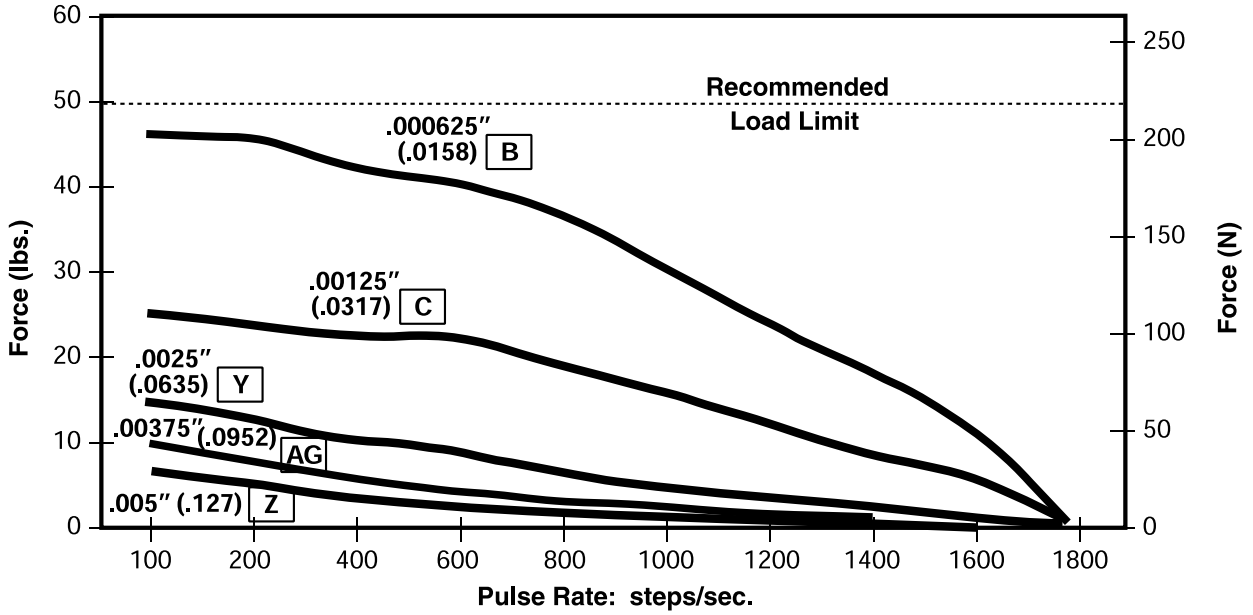

FORCE vs. LINEAR VELOCITY

Bipolar • Chopper • 100% Duty Cycle

Ø .250 (6.35) Leadscrew

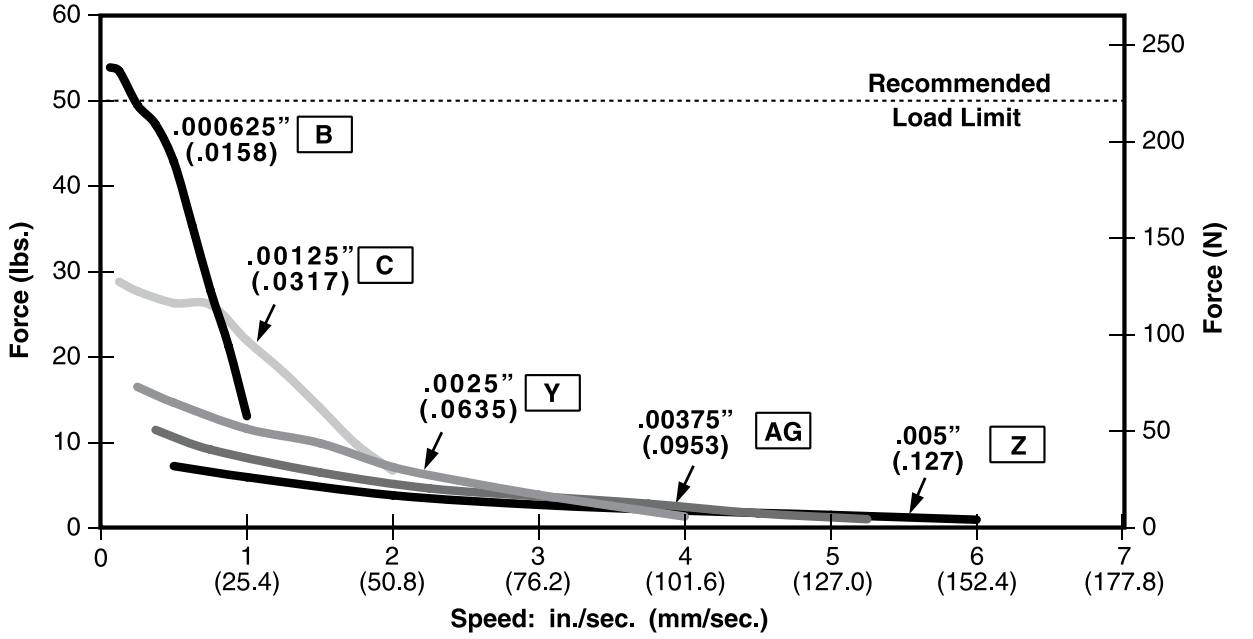

NOTE: All chopper drive curves were created with a 5 volt motor and a 40 volt power supply.

Ramping can increase the performance of a motor either by increasing the top speed or getting a heavier load accelerated up to speed faster. Also, deceleration can be used to stop the motor without overshoot.

With L/R drives peak force and speeds are reduced, using a unipolar drive will yield a further 30% force reduction.

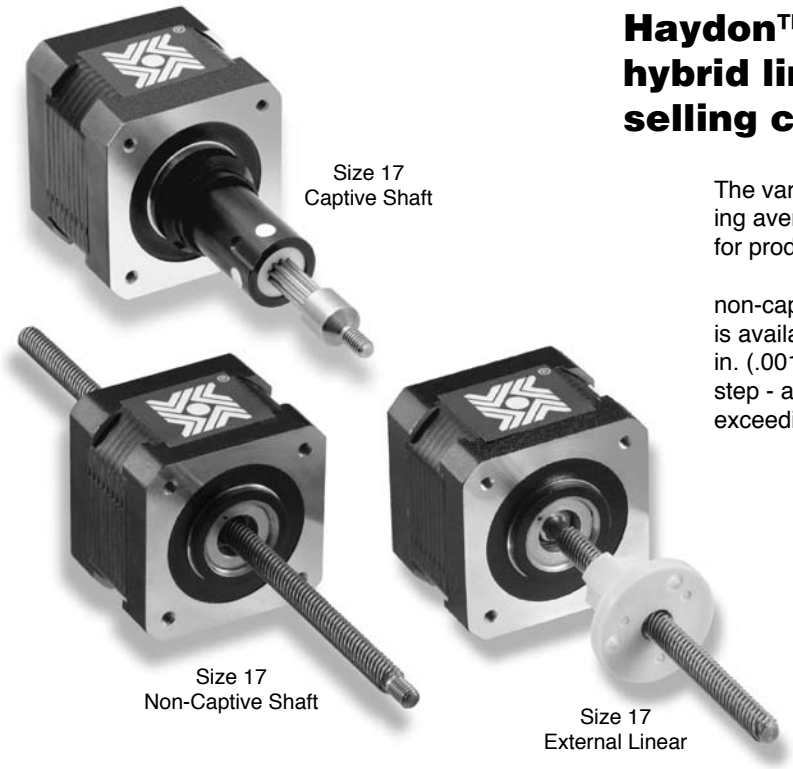

Haydon™ 43000 Series Size 17 hybrid linear actuators are our best selling compact hybrid motors.

The various patented designs deliver high performance, opening avenues for equipment designers who previously settled for products with inferior performance and endurance.

Three designs are available, captive, non-captive and external linear versions. The 43000 Series is available in a wide variety of resolutions - from 0.00006-in. (.001524 mm) per step to 0.00192-in. (.048768 mm) per step - and delivers thrust of up to 50 lbs. (222 N), or speeds exceeding 3 inches (7.62 cm) per second.

Salient Characteristics

Size 17: 43 mm (1.7-in) Hybrid Linear Actuator (1.8° Step Angle)						
Part No.	Captive	43H4(X)-V			43H6(X)-V	
	Non-captive	43F4(X)-V			43F6(X)-V	
	External Lin.	E43H4(X)-V			E43H6(X)-V	
Wiring		Bipolar			Unipolar**	
Winding voltage		2.33 VDC	5 VDC	12 VDC	5 VDC	12 VDC
Current/phase		1.5 A	700 mA	290 mA	700 mA	290 mA
Resistance/phase		1.56 Ω	7.2 Ω	41.5 Ω	7.2 Ω	41.5 Ω
Inductance/phase		1.9 mH	8.7 mH	54.0 mH	4.4 mH	27.0 mH
Power consumption		7 W				
Rotor inertia		37 gcm^2				
Temperature rise		135°F Rise (75°C Rise)				
Weight		8.5 oz (241 g)				
Insulation resistance		20 MΩ				

** Unipolar drive gives approximately 30% less thrust than bipolar drive.

Linear Travel / Step					
Screw Ø .218" (5.54 mm) inches	mm	**Order Code I.D.**	Screw Ø .250" (6.35 mm) inches	mm	**Order Code I.D.**
.00012	.0030*	N	.00015625	.0039*	P
.00024	.0060*	K	.0003125	.0079*	A
.00048	.0121*	J	.000625	.0158*	B
.00096	.0243*	Q	.00125	.0317*	C
.00192	.0487*	R			

*Values truncated

Standard motors are Class B rated for maximum temperature of 130°C. Also available, motors with high temperature capability windings up to 155°C.

Special drive considerations may be necessary when leaving shaft fully extended or fully retracted.

43000 Series: Size 17 Dimensional Drawings

Captive Leadscrew

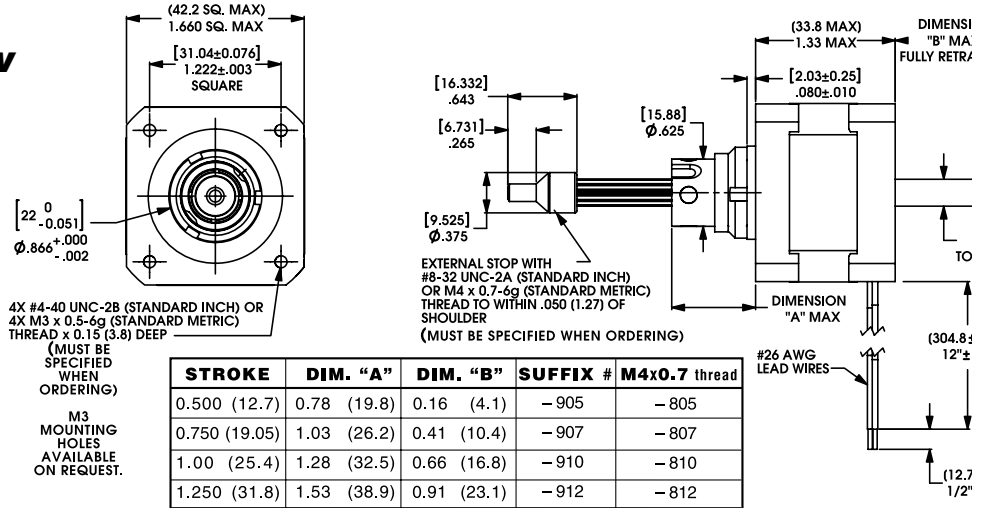

STROKE	DIM. "A"	DIM. "B"	SUFFIX #	M4x0.7 thread
0.500 (12.7)	0.78 (19.8)	0.16 (4.1)	–905	–805
0.750 (19.05)	1.03 (26.2)	0.41 (10.4)	–907	–807
1.00 (25.4)	1.28 (32.5)	0.66 (16.8)	–910	–810
1.250 (31.8)	1.53 (38.9)	0.91 (23.1)	–912	–812
1.500 (38.1)	1.78 (45.2)	1.16 (29.5)	–915	–815
2.00 (50.8)	2.28 (57.9)	1.66 (42.2)	–920	–820
2.500 (63.5)	2.78 (70.6)	2.16 (54.9)	–925	–825

Integrated connector option, see page 95

Non-Captive Leadscrew

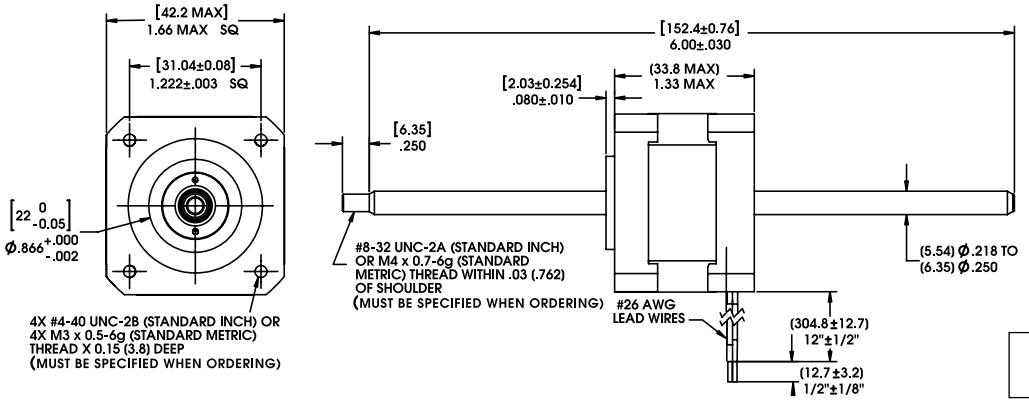

Integrated connector option, see page 95

External Linear

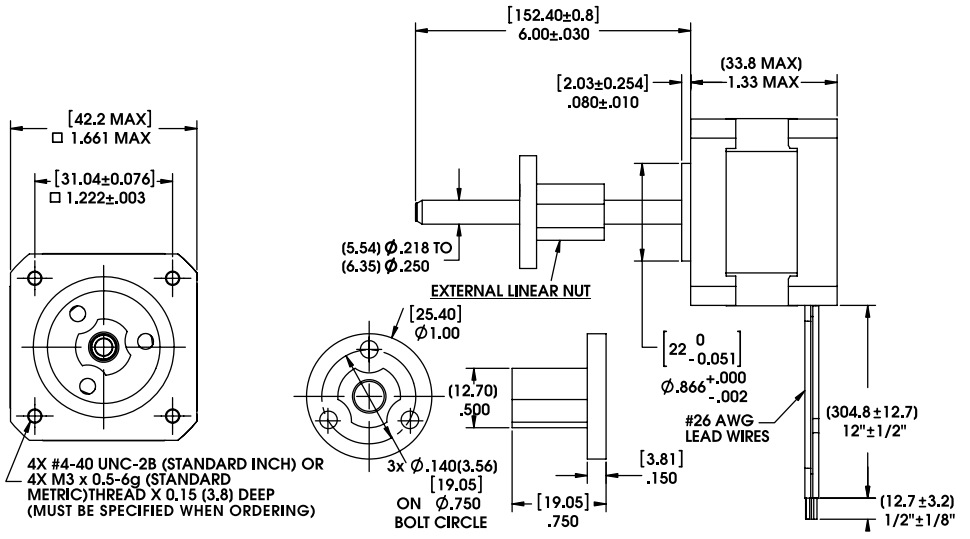

Integrated connector option, see page 95

FORCE vs. PULSE RATE Bipolar • Chopper • 100% Duty Cycle

Ø .218 (5.54) Leadscrew

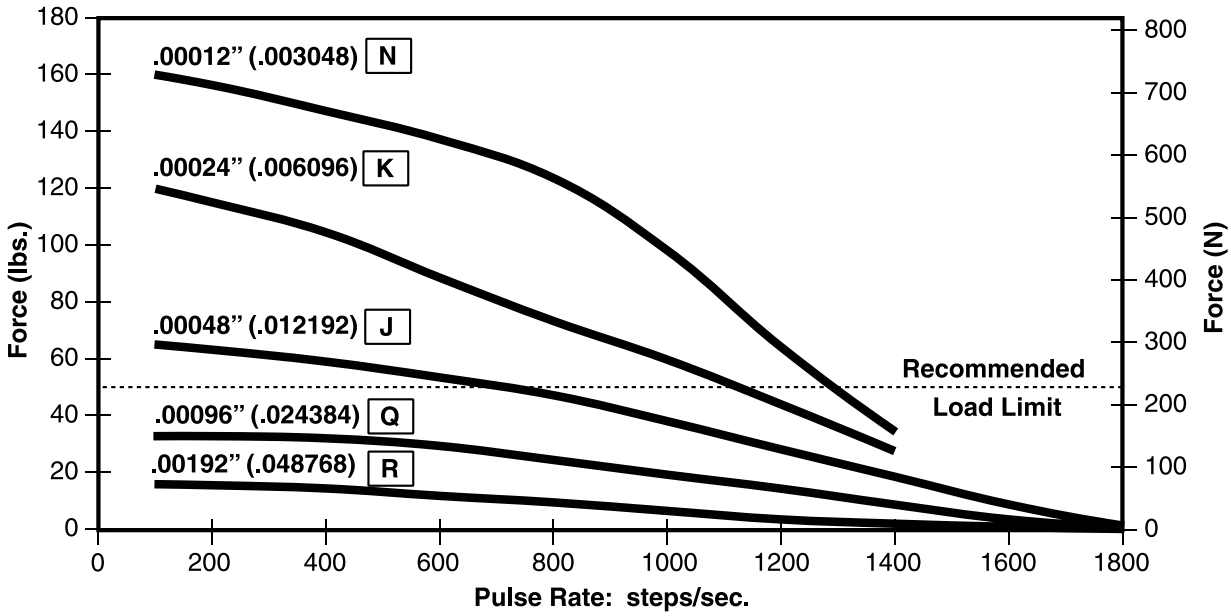

Ø .250 (6.35) Leadscrew

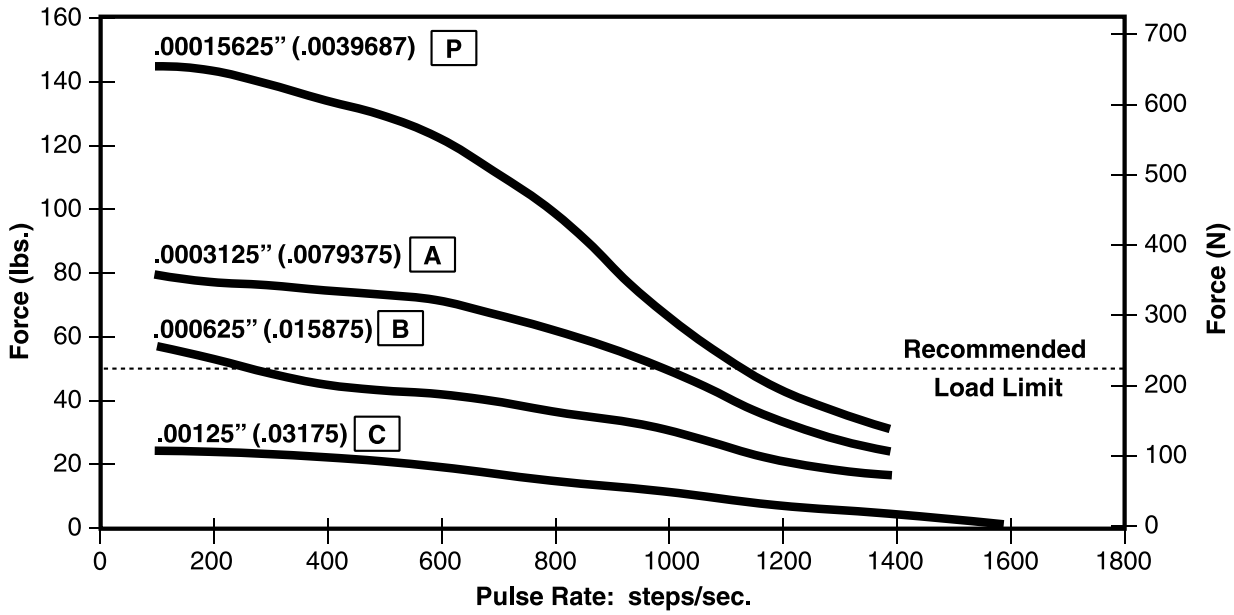

NOTE: All chopper drive curves were created with a 5 volt motor and a 40 volt power supply.

Ramping can increase the performance of a motor either by increasing the top speed or getting a heavier load accelerated up to speed faster. Also, deceleration can be used to stop the motor without overshoot.

With L/R drives peak force and speeds are reduced, using a unipolar drive will yield a further 30% force reduction.

FORCE vs. LINEAR VELOCITY

Bipolar • Chopper • 100% Duty Cycle

Ø .218 (5.54) Leadscrew

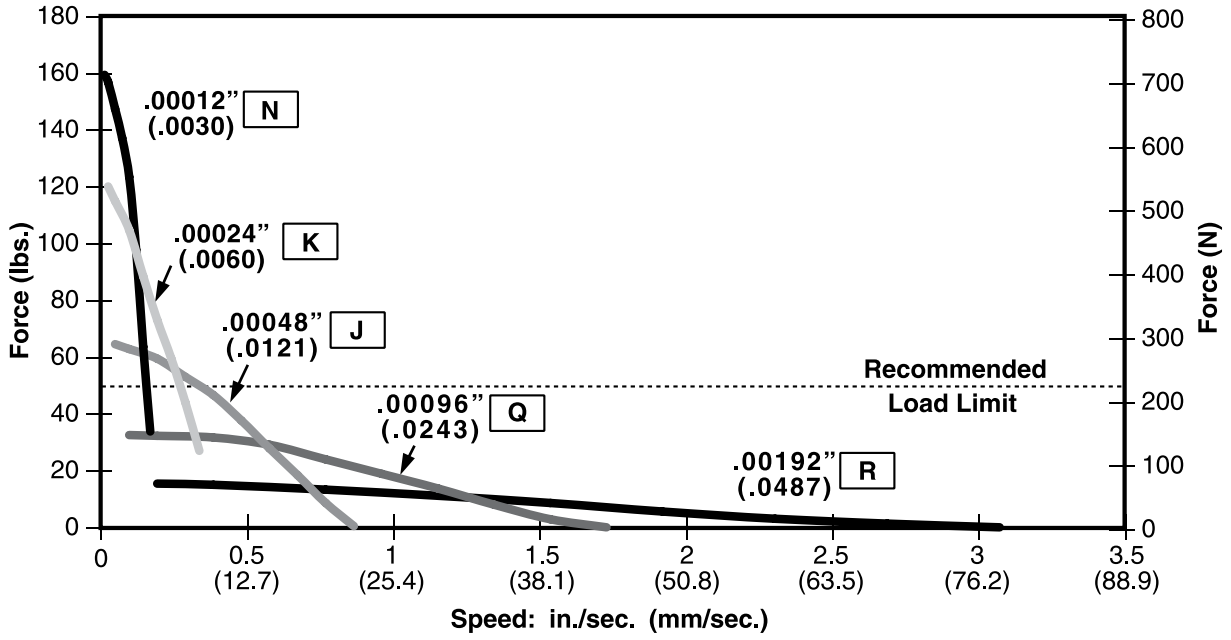

Ø .250 (6.35) Leadscrew

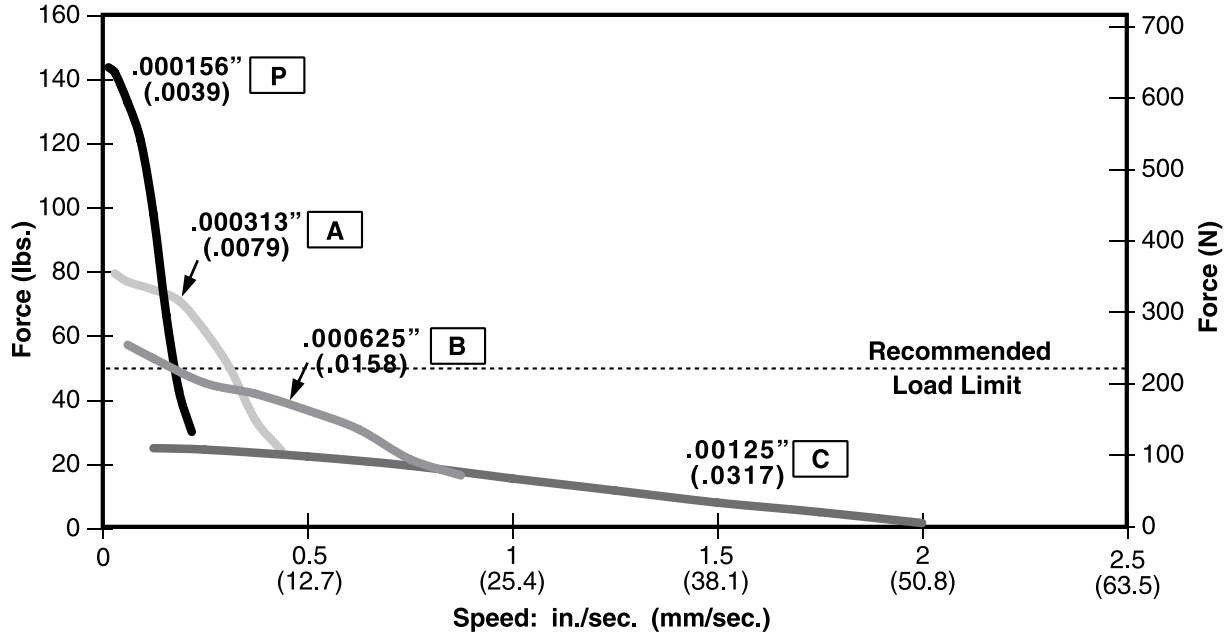

NOTE: All chopper drive curves were created with a 5 volt motor and a 40 volt power supply.

Ramping can increase the performance of a motor either by increasing the top speed or getting a heavier load accelerated up to speed faster. Also, deceleration can be used to stop the motor without overshoot.

With L/R drives peak force and speeds are reduced, using a unipolar drive will yield a further 30% force reduction.

Haydon Kerk Motion Solutions, Inc. • www.HaydonKerk.com • Phone: 800.243.2715 • International: 203.756.7441

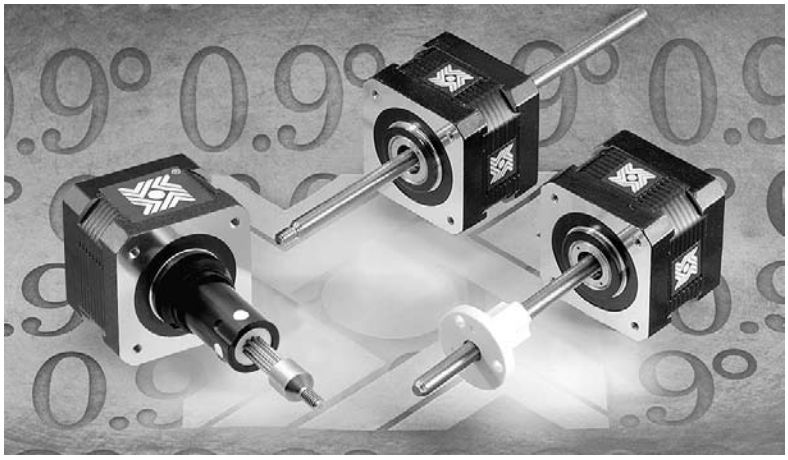

Haydon™ 43000 Series Size 17, 0.9° high resolution hybrid motor has been specially engineered to deliver high speed, force and endurance.

The Size 17 High Resolution Actuator features a production-proven, patented rotor drive nut that delivers trouble-free, long-term performance.

Combined with a stainless steel lead-screw, the motor delivers an extremely smooth, precise motion.

Designed for applications that require long-life reliability, precise positioning and rapid motion.

Salient Characteristics

Size 17: 43 mm (1.7-in) Hybrid Linear Actuator (0.9° Step Angle)						
Part No.	Captive	43K4(X)-V			43K6(X)-V	
	Non-captive	43J4(X)-V			43J6(X)-V	
	External Lin.	E43K4(X)-V			E43K6(X)-V	
Wiring		Bipolar			Unipolar**	
Winding voltage		2.33 VDC	5 VDC	12 VDC	5 VDC	12 VDC
Current/phase RMS		1.5 A	700 mA	290 mA	700 mA	290 mA
Resistance/phase		1.56 Ω	7.2 Ω	41.5 Ω	7.2 Ω	41.5 Ω
Inductance/phase		2.6 mH	12.0 mH	70.0 mH	6.0 mH	35.0 mH
Power consumption		7 W				
Rotor inertia		37 gcm^2				
Temperature rise		135°F Rise (75°C Rise)				
Weight		8.5 oz (241 g)				
Insulation resistance		20 MΩ				

** Unipolar drive gives approximately 30% less thrust than bipolar drive.

Linear Travel / Step					
Screw Ø .218" (5.54 mm) inches	mm	**Order Code I.D.**	Screw Ø .250" (6.35 mm) inches	mm	**Order Code I.D.**
.00006	.0015*	U	.000078*	.00198*	V
.00012	.0030*	N	.00015625	.0039*	P
.00024	.0060*	K	.0003125	.0079*	A
.00048	.0121*	J	.000625	.0158*	B
.00096	.0243*	Q			

*Values truncated

Special drive considerations may be necessary when leaving shaft fully extended or fully retracted.

43000 Series: Size 17 High Resolution Linear Actuator Performance Curves

FORCE vs. PULSE RATE

Bipolar · Chopper · 100% Duty Cycle

Ø .218 (5.54) and Ø .250 (6.35) Leadscrews

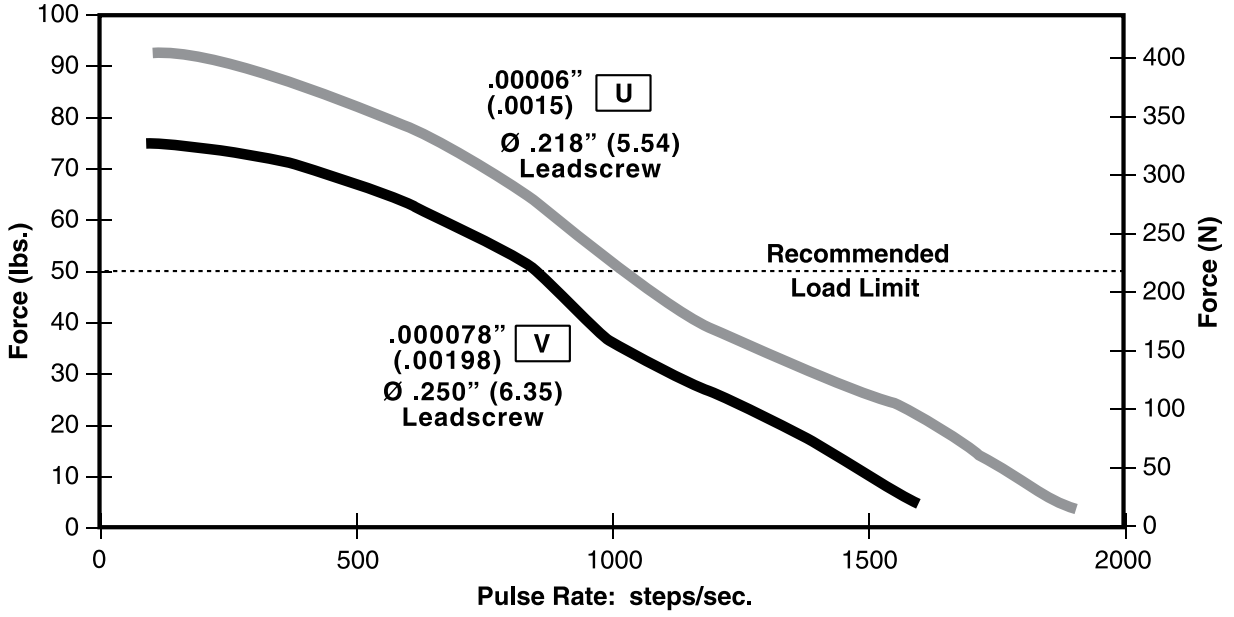

FORCE vs. LINEAR VELOCITY

Bipolar · Chopper · 100% Duty Cycle

Ø .218 (5.54) and Ø .250 (6.35) Leadscrews

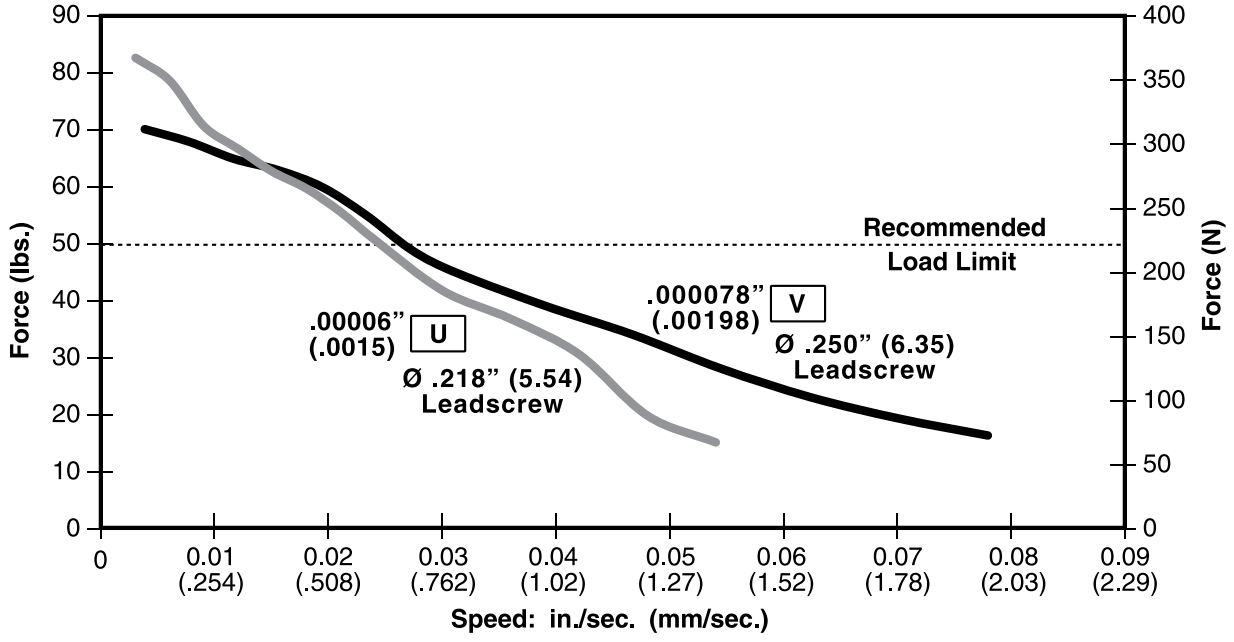

NOTE: All chopper drive curves were created with a 5 volt motor and a 40 volt power supply.

Ramping can increase the performance of a motor either by increasing the top speed or getting a heavier load accelerated up to speed faster. Also, deceleration can be used to stop the motor without overshoot.

With L/R drives peak force and speeds are reduced, using a unipolar drive will yield a further 30% force reduction.

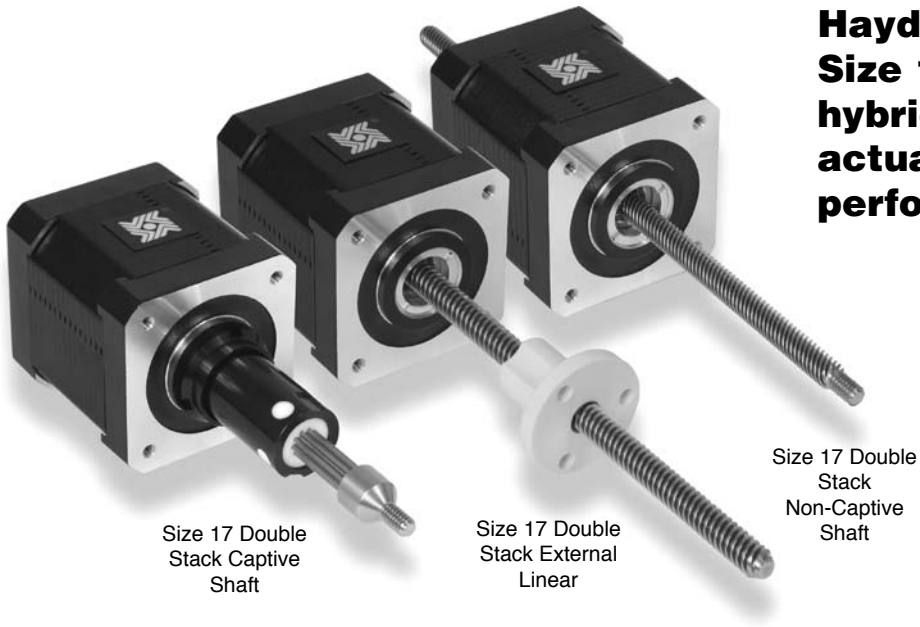

Size 17 Double Stack Captive Shaft

Size 17 Double Stack External Linear

Size 17 Double Stack Non-Captive Shaft

Haydon™ 43000 Series Size 17 Double Stack hybrid linear actuators offer greater performance.

The various patented designs deliver exceptional performance and new linear motion design opportunities.

Three designs are available, captive, non-captive and external linear versions. The 43000 Series is available in a wide variety of resolutions - from 0.000625-in (.0158 mm) per step to 0.005-in (.127 mm) per step. The motors can also be microstepped for even finer resolutions. The Size 17 double stack actuator delivers thrust of up to 75 lbs. (337 N).

Salient Characteristics

Size 17: 43 mm (1.7-in) Double Stack Hybrid Linear Actuator (1.8° Step Angle)				
Part No.	Captive	43M4(X)-V		
	Non-captive	43L4(X)-V		
	External Lin.	E43M4(X)-V		
Wiring		Bipolar		
Winding voltage		2.33 VDC	5 VDC	12 VDC
Current/phase		2.6 A	1.3 A	550 mA
Resistance/phase		0.9 Ω	3.8 Ω	21.9 Ω
Inductance/phase		1.33 mH	8.21 mH	45.1 mH
Power consumption		14 W Total		
Temperature rise		135°F Rise (75°C Rise)		
Weight		12.5 oz (352 g)		
Insulation resistance		20 MΩ		
Max. Load Limit		75 lbs (337 N)		

Linear Travel / Step Screw Ø.250" (6.35 mm) inches	mm	**Order Code I.D.**
.000625	.0158*	B
.00125	.0317*	C
.0025	.0635	Y
.00375	.0953	AG
.005	.127	Z

*Values truncated

Standard motors are Class B rated for maximum temperature of 130°C.

Special drive considerations may be necessary when leaving shaft fully extended or fully retracted.

43000 Series: Size 17
Double Stack Dimensional Drawings

Captive Leadscrew

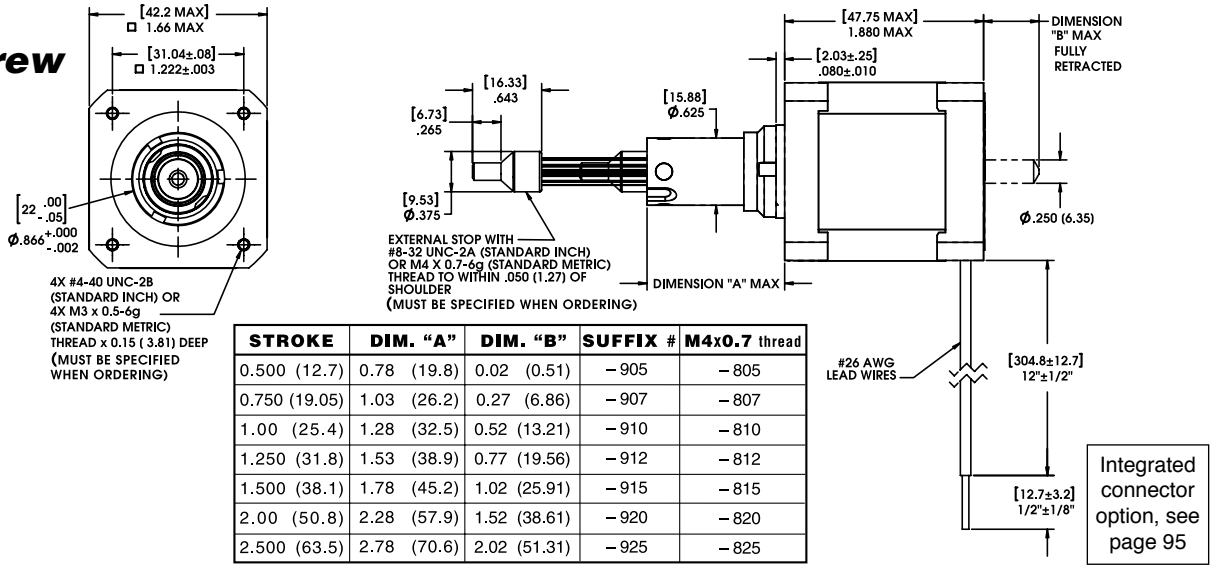

STROKE	DIM. "A"	DIM. "B"	SUFFIX #	M4x0.7 thread
0.500 (12.7)	0.78 (19.8)	0.02 (0.51)	–905	–805
0.750 (19.05)	1.03 (26.2)	0.27 (6.86)	–907	–807
1.00 (25.4)	1.28 (32.5)	0.52 (13.21)	–910	–810
1.250 (31.8)	1.53 (38.9)	0.77 (19.56)	–912	–812
1.500 (38.1)	1.78 (45.2)	1.02 (25.91)	–915	–815
2.00 (50.8)	2.28 (57.9)	1.52 (38.61)	–920	–820
2.500 (63.5)	2.78 (70.6)	2.02 (51.31)	–925	–825

Integrated connector option, see page 95

Non-Captive Leadscrew

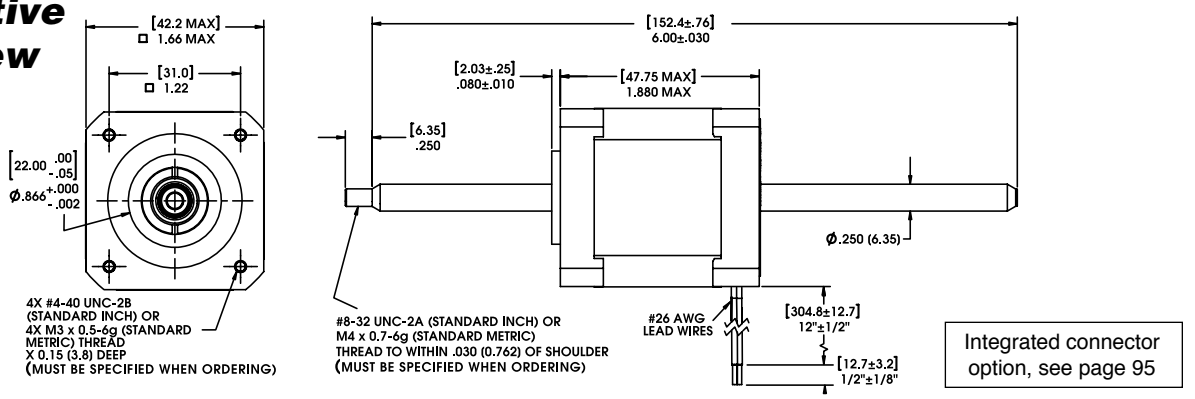

Integrated connector option, see page 95

External Linear

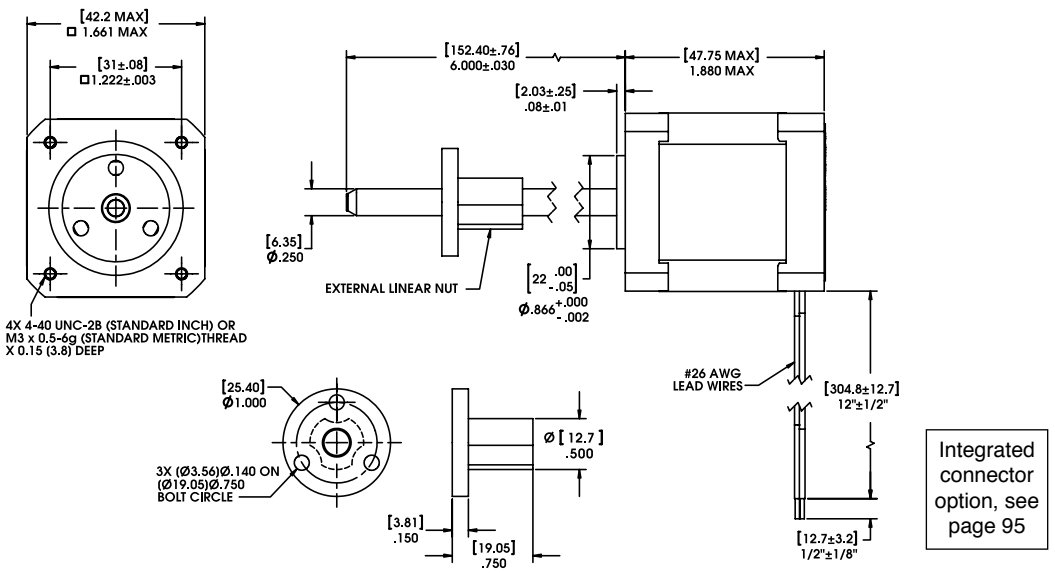

Integrated connector option, see page 95

FORCE vs. PULSE RATE

Bipolar • Chopper • 100% Duty Cycle

Ø .250 (6.35) Leadscrew

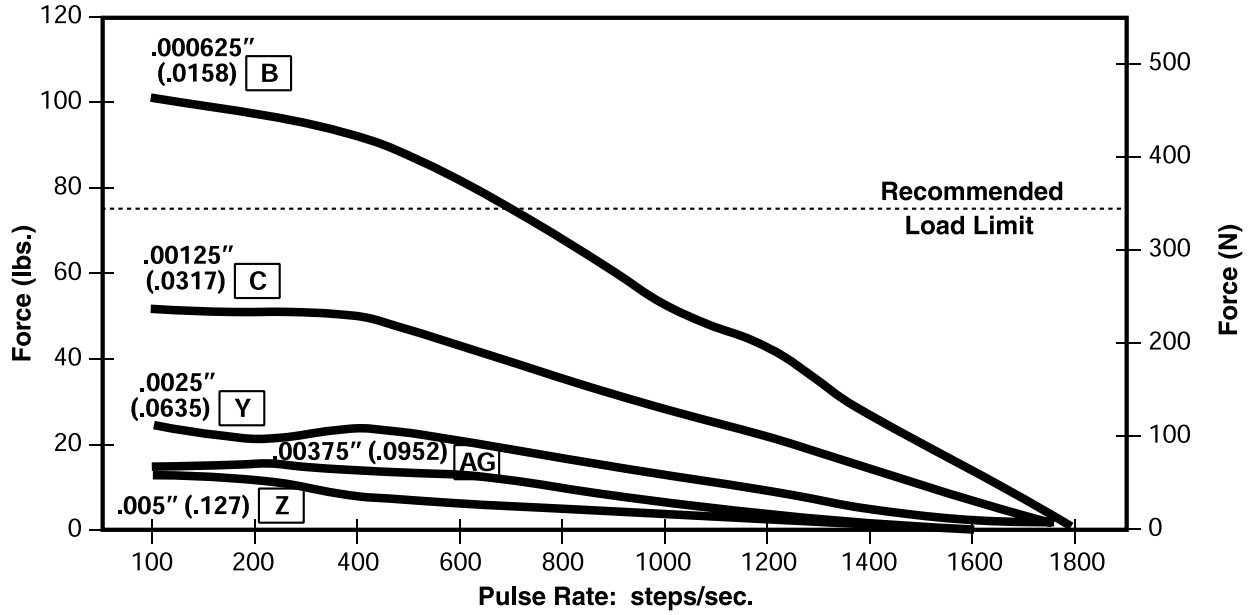

FORCE vs. LINEAR VELOCITY

Bipolar • Chopper • 100% Duty Cycle

Ø .250 (6.35) Leadscrew

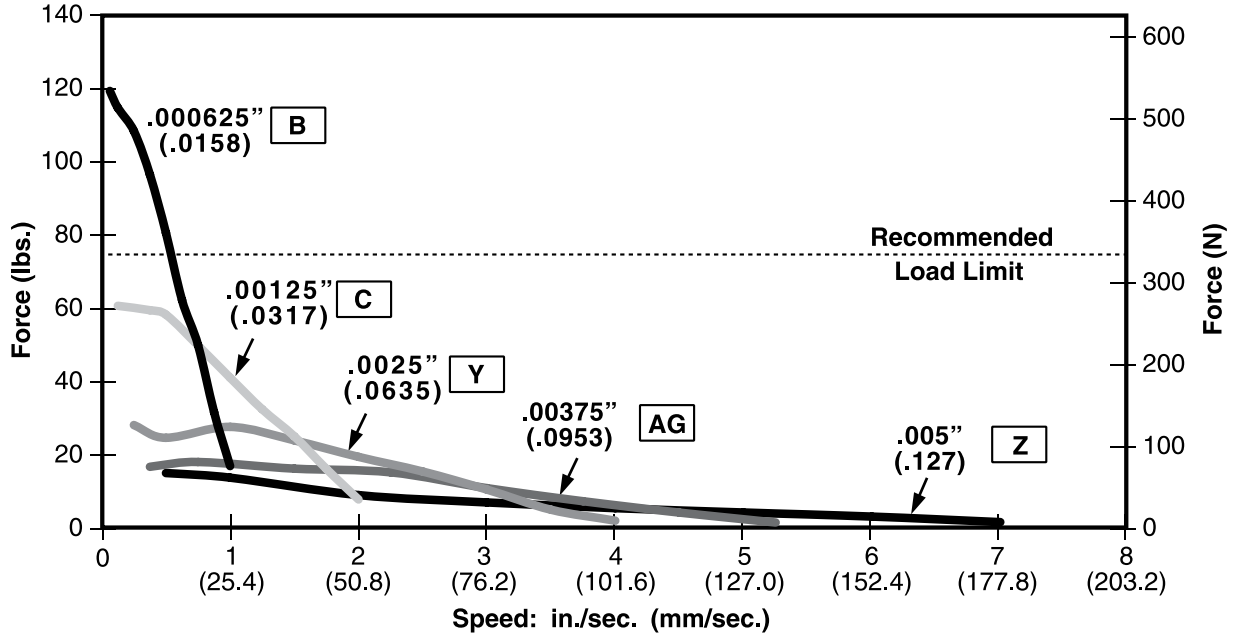

NOTE: All chopper drive curves were created with a 5 volt motor and a 40 volt power supply.

Ramping can increase the performance of a motor either by increasing the top speed or getting a heavier load accelerated up to speed faster. Also, deceleration can be used to stop the motor without overshoot.

With L/R drives peak force and speeds are reduced, using a unipolar drive will yield a further 30% force reduction.

57000 Series: Size 23 Linear Actuator

Haydon Kerk Motion Solutions, Inc. • www.HaydonKerk.com • Phone: 800.243.2715 • International: 203.756.7441

Haydon™ Size 23 hybrids... for applications that require forces up to 200 lbs. (890 N)

The Haydon™ Size 23 incorporates the same high performance and durable patented design as the Size 17.

The 57000 Series Hybrid Linear Actuator is available in a wide variety of resolutions - from 0.0003125-in. (.0079375 mm) per step to 0.002-in. (.0508 mm) per step. They deliver a thrust of up to 200 lbs. (890 N) or speeds exceeding 2.0-in. (5.08 cm) per second.

Size 23
External Linear

Size 23
Non-Captive
Shaft

Size 23 Captive
Shaft

Salient Characteristics

Size 23: 57 mm (2.3-in) Hybrid Linear Actuator (1.8° Step Angle)						
Part No.	Captive	57H4(X)-V			57H6(X)-V	
	Non-captive	57F4(X)-V			57F6(X)-V	
	External Lin.	E57H4(X)-V			E57H6(X)-V	
Wiring		Bipolar			Unipolar**	
Winding voltage		3.25 VDC	5 VDC	12 VDC	5 VDC	12 VDC
Current/phase		2.0 A	1.3 A	.54 A	1.3 A	.54 A
Resistance/phase		1.63 Ω	3.85 Ω	22.2 Ω	3.85 Ω	22.2 Ω
Inductance/phase		3.5 mH	10.5 mH	58 mH	5.3 mH	23.6 mH
Power consumption		13 W				
Rotor inertia		166 gcm^2				
Temperature rise		135°F Rise (75°C Rise)				
Weight		18 oz (511 g)				
Insulation resistance		20 MΩ				

** Unipolar drive gives approximately 30% less thrust than bipolar drive.

Linear Travel / Step Screw Ø.375"(9.53 mm) inches	mm	**Order Code I.D.**
.0003125	.0079*	A
.0004167	.0105*	S
.0005	.0127	3
.0008333	.0211*	T
.001	.0254	1
.002	.0508	2

*Values truncated

Standard motors are Class B rated for maximum temperature of 130°C.

Special drive considerations may be necessary when leaving shaft fully extended or fully retracted.

Captive Leadscrew

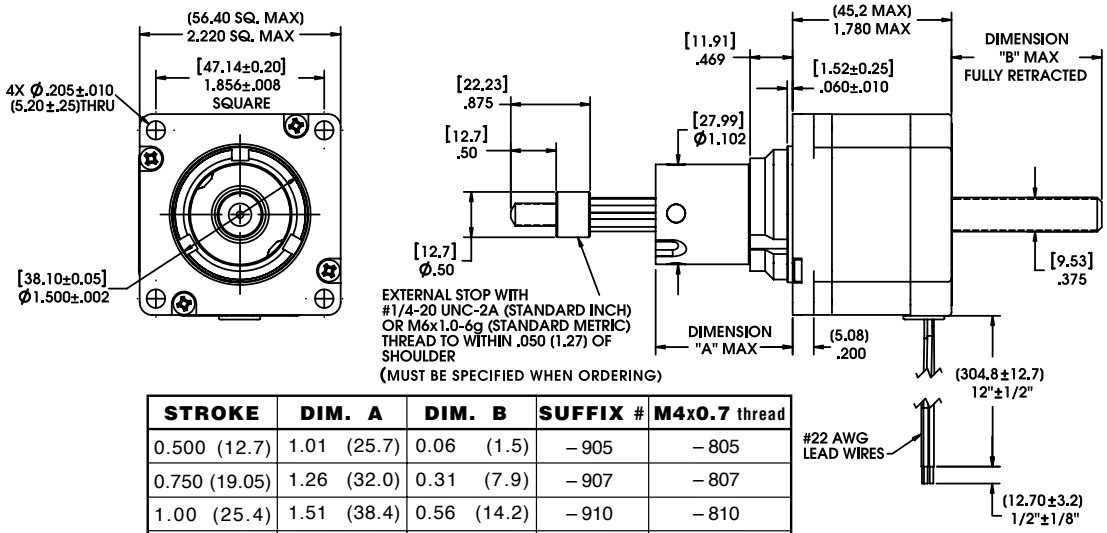

STROKE	DIM. A	DIM. B	SUFFIX #	M4x0.7 thread
0.500 (12.7)	1.01 (25.7)	0.06 (1.5)	– 905	– 805
0.750 (19.05)	1.26 (32.0)	0.31 (7.9)	– 907	– 807
1.00 (25.4)	1.51 (38.4)	0.56 (14.2)	– 910	– 810
1.250 (31.8)	1.76 (44.7)	0.81 (20.6)	– 912	– 812
1.500 (38.1)	2.01 (51.1)	1.06 (26.9)	– 915	– 815
2.00 (50.8)	2.51 (63.8)	1.56 (39.6)	– 920	– 820
2.500 (63.5)	3.01 (76.5)	2.06 (52.3)	– 925	– 825

Non-Captive Leadscrew

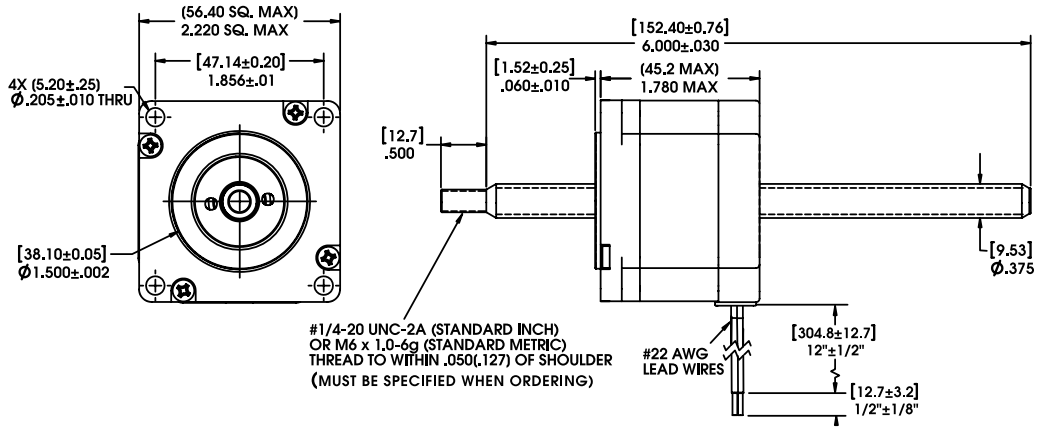

External Linear

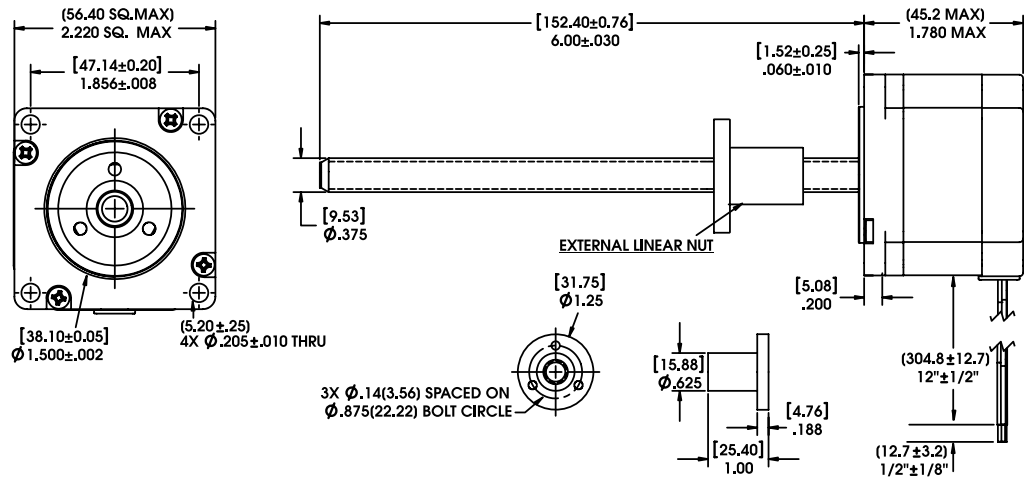

FORCE vs. PULSE RATE

Bipolar • Chopper • 100% Duty Cycle

Ø .375 (9.53) Leadscrew

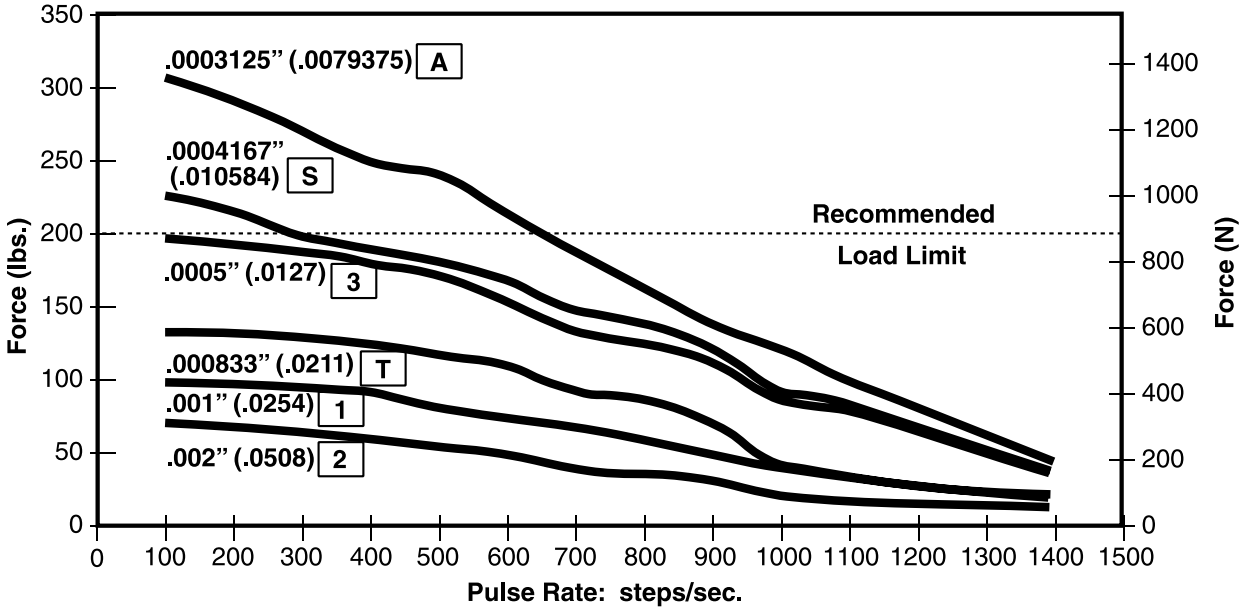

FORCE vs. LINEAR VELOCITY

Bipolar • Chopper • 100% Duty Cycle

Ø .375 (9.53) Leadscrew

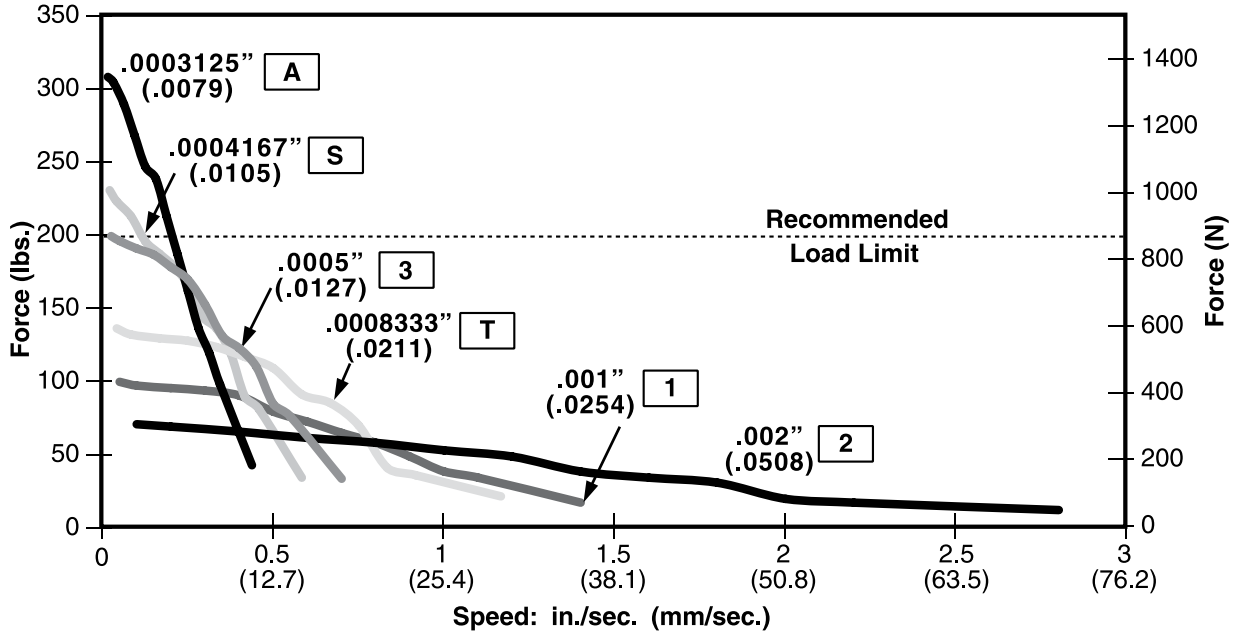

NOTE: All chopper drive curves were created with a 5 volt motor and a 75 volt power supply.

Ramping can increase the performance of a motor either by increasing the top speed or getting a heavier load accelerated up to speed faster. Also, deceleration can be used to stop the motor without overshoot.

With L/R drives peak force and speeds are reduced, using a unipolar drive will yield a further 30% force reduction.

A full linear step movement as low as 2 microns and a thrust capability up to 200 lbs (890 N)

The Haydon™ 57000 Series Size 23, 0.9° high resolution (standard resolution = 1.8°) hybrid offers precise motion with excellent motion control. Combined with a stainless steel leadscrew and a production-proven, patented rotor drive nut this motor is designed for trouble-free, long-term performance. Adaptable to customer specifications.

Salient Characteristics

Size 23: 57 mm (2.3-in) Hybrid Linear Actuator (0.9° Step Angle)						
Part No.	Captive	57K4(X)-V			57K6(X)-V	
	Non-captive	57J4(X)-V			57J6(X)-V	
	External Lin.	E57K4(X)-V			E57K6(X)-V	
Wiring		Bipolar			Unipolar**	
Winding voltage		3.25 VDC	5 VDC	12 VDC	5 VDC	12 VDC
Current/phase		2.0 A	1.3 A	0.54 A	1.3 A	0.54 A
Resistance/phase		1.63 Ω	3.85 Ω	22.2 Ω	3.85 Ω	22.2 Ω
Inductance/phase		4.2 mH	13 mH	68 mH	6 mH	27 mH
Power consumption		13 W				
Rotor inertia		37 gcm^2				
Temperature rise		135°F Rise (75°C Rise)				
Weight		18 oz (511 g)				
Insulation resistance		20 MΩ				

** Unipolar drive gives approximately 30% less thrust than bipolar drive.

Linear Travel / Step Screw Ø.375"(9.53 mm) inches	mm	**Order Code I.D.**
.000125	.0031*	7
.00015625	.003969	P
.00020833	.00529166	X
.00025	.00635	9
.0004167	.01058418	S
.0005	.0127	3
.001	.0254	1

*Values truncated

Special drive considerations may be necessary when leaving shaft fully extended or fully retracted.

57000 Series: Size 23 High Resolution Linear Actuator Performance Curves

Haydon Kerk Motion Solutions, Inc. • www.HaydonKerk.com • Phone: 800.243.2715 • International: 203.756.7441

FORCE vs. PULSE RATE

Bipolar • Chopper • 100% Duty Cycle

Ø .375 (9.53) Leadscrew

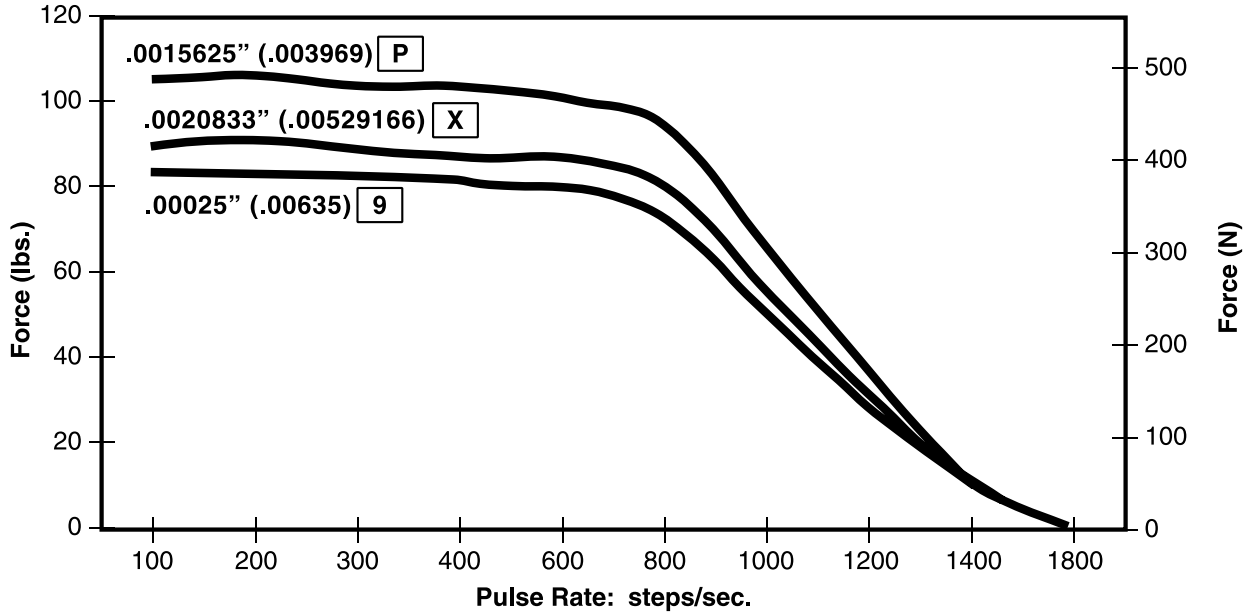

FORCE vs. LINEAR VELOCITY

Bipolar • Chopper • 100% Duty Cycle

Ø .375 (9.53) Leadscrew

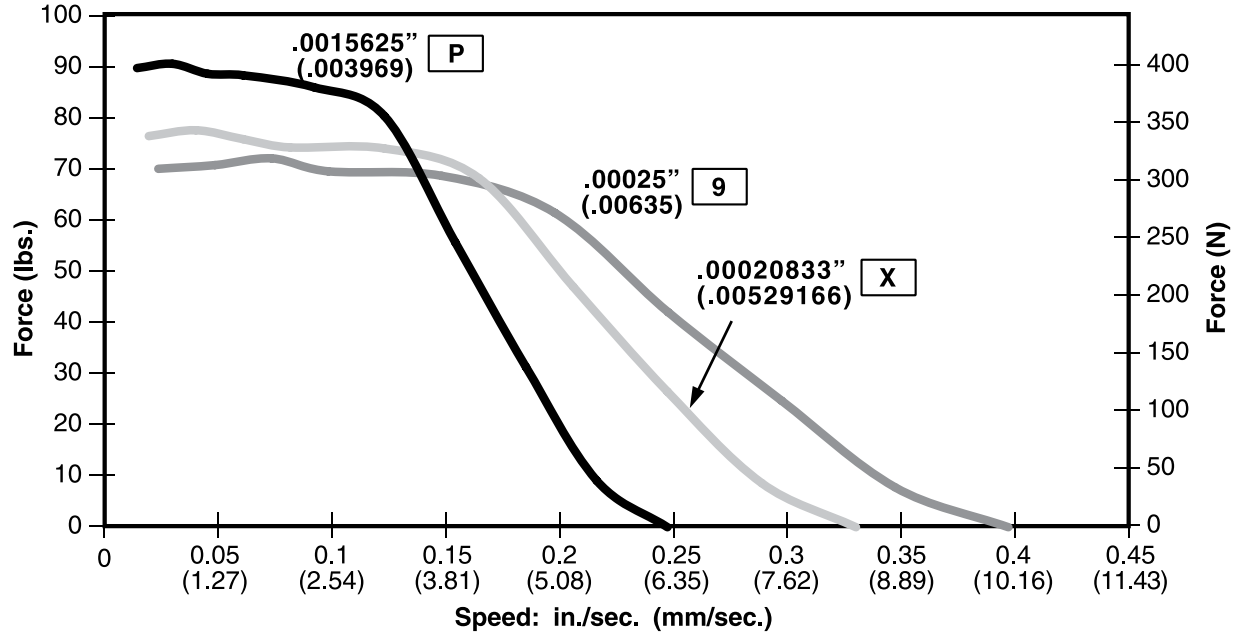

NOTE: All chopper drive curves were created with a 5 volt motor and a 75 volt power supply.

Ramping can increase the performance of a motor either by increasing the top speed or getting a heavier load accelerated up to speed faster. Also, deceleration can be used to stop the motor without overshoot.

With L/R drives peak force and speeds are reduced, using a unipolar drive will yield a further 30% force reduction.

Haydon™ 57000 Series Size 23 Double Stack hybrid linear actuators deliver greater performance in a compact size.

The various patented designs deliver exceptional performance and new linear motion design opportunities. Three designs are available, captive, non-captive and external linear versions. The 57000 Series is available in a wide variety of resolutions - from 0.0005-in (.0127 mm) per step to 0.005-in (.127 mm) per step. The motors can also be microstepped for even finer resolutions. The Size 23 actuator delivers thrust of up to 200 lbs. (890 N).

Size 23 Double Stack Captive Shaft

Size 23 Double Stack External Linear

Size 23 Double Stack Non-Captive Shaft

Salient Characteristics

Size 23: 57 mm (2.3-in) Double Stack Hybrid Linear Actuator (1.8° Step Angle)				
Part No.	Captive	57M4(X)-V		
	Non-captive	57L4(X)-V		
	External Lin.	E57M4(X)-V		
Wiring		Bipolar		
Winding voltage		3.25 VDC	5 VDC	12 VDC
Current/phase		3.85 A	2.5 A	1 A
Resistance/phase		0.8 Ω	2.0 Ω	12.0 Ω
Inductance/phase		2.3 mH	7.6 mH	35.0 mH
Power consumption		25 W Total		
Temperature rise		135°F Rise (75°C Rise)		
Weight		32 oz (958 g)		
Insulation resistance		20 MΩ		
Max. Load Limit		200 lbs (890 N)		

Linear Travel / Step Screw Ø.375" (9.53 mm) inches	mm	Order Code I.D.
.0005	.0127	3
.001	.0254	1
.002	.0508	2
.0025	.0635	Y
.005	.127	Z

*Values truncated

Standard motors are Class B rated for maximum temperature of 130°C.

Special drive considerations may be necessary when leaving shaft fully extended or fully retracted.

57000 Series: Size 23
Double Stack Dimensional Drawings

Captive Leadscrew

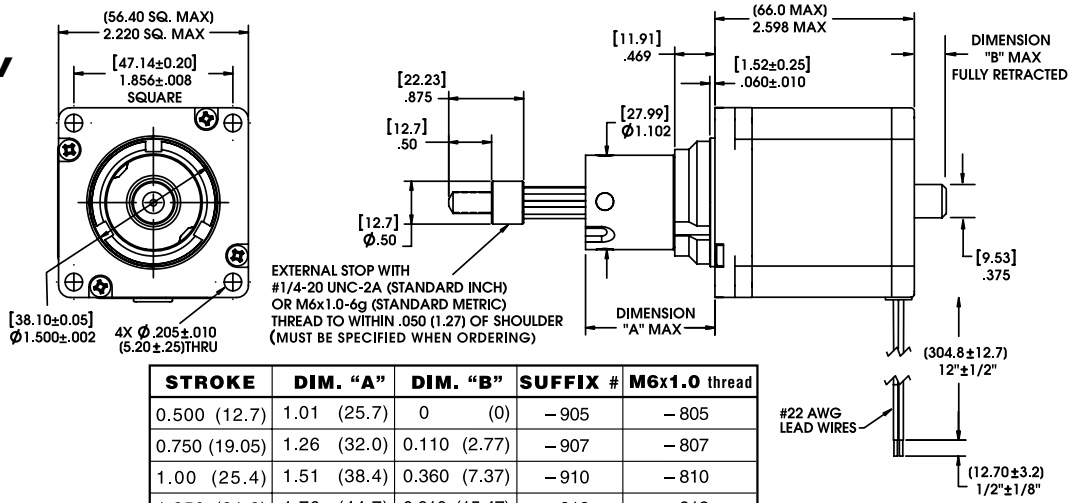

STROKE	DIM. "A"	DIM. "B"	SUFFIX #	M6x1.0 thread
0.500 (12.7)	1.01 (25.7)	0 (0)	–905	–805
0.750 (19.05)	1.26 (32.0)	0.110 (2.77)	–907	–807
1.00 (25.4)	1.51 (38.4)	0.360 (7.37)	–910	–810
1.250 (31.8)	1.76 (44.7)	0.610 (15.47)	–912	–812
1.500 (38.1)	2.01 (51.1)	0.860 (21.83)	–915	–815
2.00 (50.8)	2.51 (63.8)	1.360 (34.52)	–920	–820
2.500 (63.5)	3.01 (76.5)	1.860 (47.22)	–925	–825

Non-Captive Leadscrew

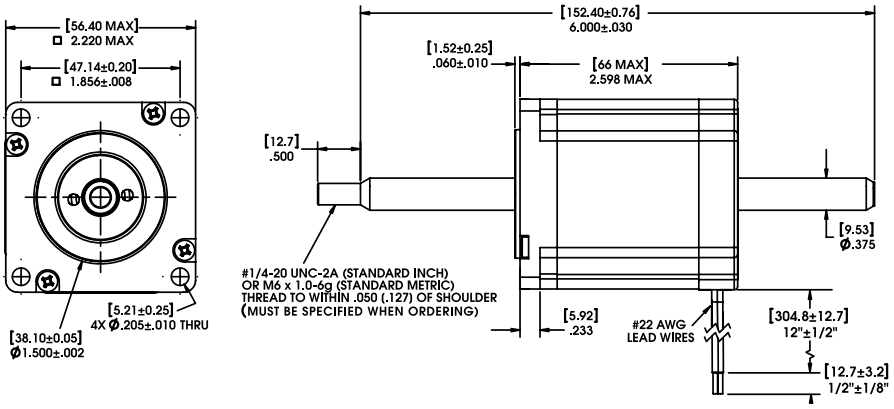

External Linear

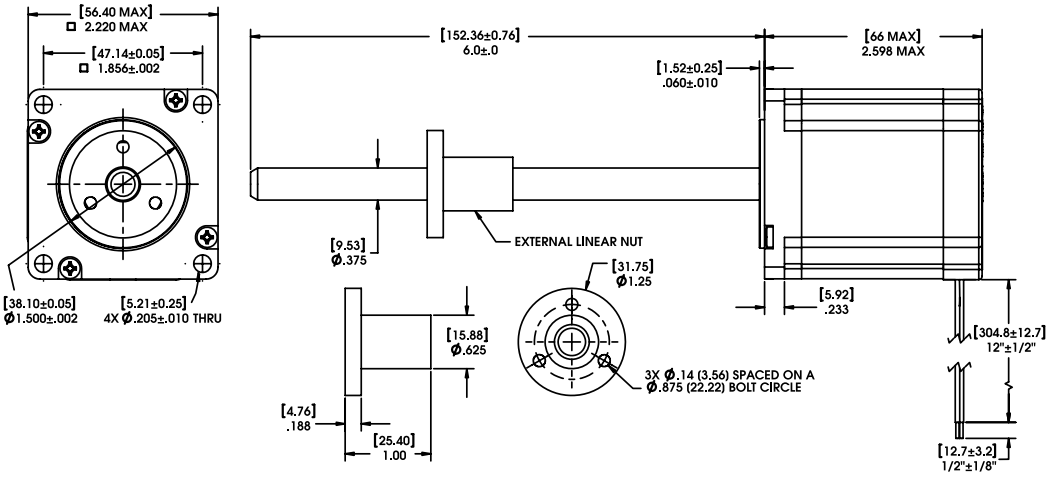

FORCE vs. PULSE RATE

Bipolar • Chopper • 100% Duty Cycle

Ø .375 (9.53) Leadscrew

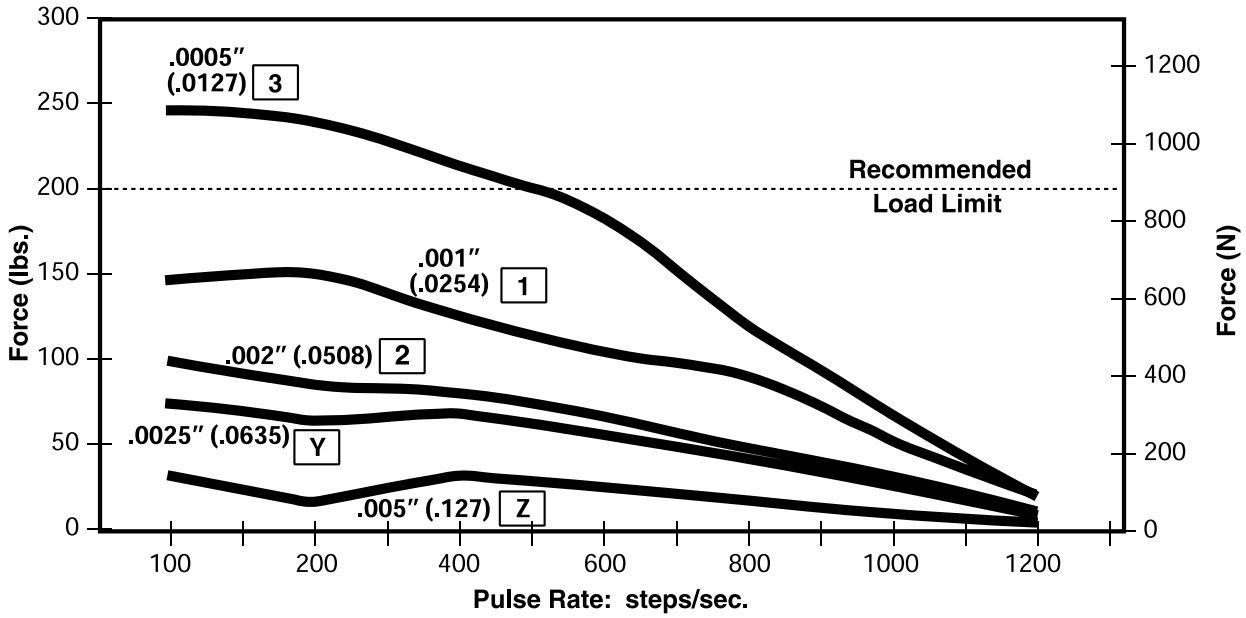

FORCE vs. LINEAR VELOCITY

Bipolar • Chopper • 100% Duty Cycle

Ø .375 (9.53) Leadscrew

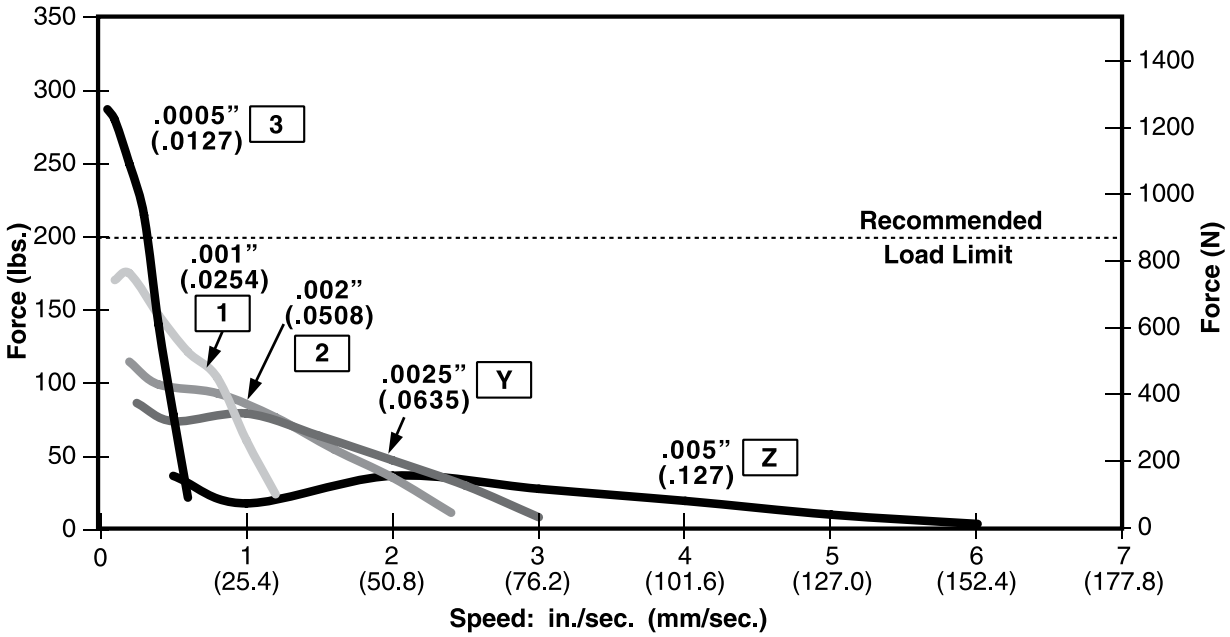

NOTE: All chopper drive curves were created with a 5 volt motor and a 40 volt power supply.

Ramping can increase the performance of a motor either by increasing the top speed or getting a heavier load accelerated up to speed faster. Also, deceleration can be used to stop the motor without overshoot.

With L/R drives peak force and speeds are reduced, using a unipolar drive will yield a further 30% force reduction.

87000 Series: Size 34 Linear Actuator

Haydon Kerk Motion Solutions, Inc. • www.HaydonKerk.com • Phone: 800.243.2715 • International: 203.756.7441

Size 34
Captive
Shaft

Size 34
Non-Captive
Shaft

Size 34
External Linear

87000 Series, Size 34... our largest, most powerful linear actuator is also available with a captive, non-captive, and external linear shaft design

Despite its large size and strength, this motor incorporates the same precision, high performance and durable patented designs featured in our entire hybrid product line.

The 87000 series delivers forces up to 500 lbs. (2224 N) in a compact, 3.4-in (87 mm) square package.

The 87000 Series is available in a wide variety of resolutions - from 0.0005-in (.0127 mm) per step to 0.005-in (.127 mm) per step. Speeds exceed 3.0-in (7.62 cm) per second.

In addition to our standard configurations, Haydon Kerk Motion Solutions, Inc. can custom build this powerful motor to meet your specific motion requirements. The in-house design and engineering team is available to assist you with a solution to fit your needs and your budget.

Salient Characteristics

Size 34: 87 mm (3.4-in) Hybrid Linear Actuator (1.8° Step Angle)						
Part No.	Captive	87H4(X)-V			87H6(X)-V	
	Non-captive	87F4(X)-V			87F6(X)-V	
	External Lin.	E87H4(X)-V			E87H6(X)-V	
Wiring		Bipolar			Unipolar*	
Winding voltage		2.85 VDC	5 VDC	12 VDC	5 VDC	12 VDC
Current/phase		5.47 A	3.12 A	1.3 A	3.12 A	1.3 A
Resistance/phase		0.52 Ω	1.6 Ω	9.23 Ω	1.6 Ω	9.23 Ω
Inductance/phase		2.86 mH	8.8 mH	51 mH	4.4 mH	25.5 mH
Power consumption		31.2 W				
Rotor inertia		1760 gcm^2				
Temperature rise		135°F Rise (75°C Rise)				
Weight		5.1 lbs. (2.3 Kg)				
Insulation resistance		20 MΩ				

** Unipolar drive gives approximately 30% less thrust than bipolar drive.

Linear Travel / Step Screw Ø.625"(15.88 mm) inches	mm	**Order Code I.D.**
.0005	.0127	3
.000625	.0158*	B
.00125	.0317*	C
.0025	.0635	Y
.005	.127	Z

*Values truncated

Standard motors are Class B rated for maximum temperature of 130°C.

Special drive considerations may be necessary when leaving shaft fully extended or fully retracted.

Captive Leadscrew

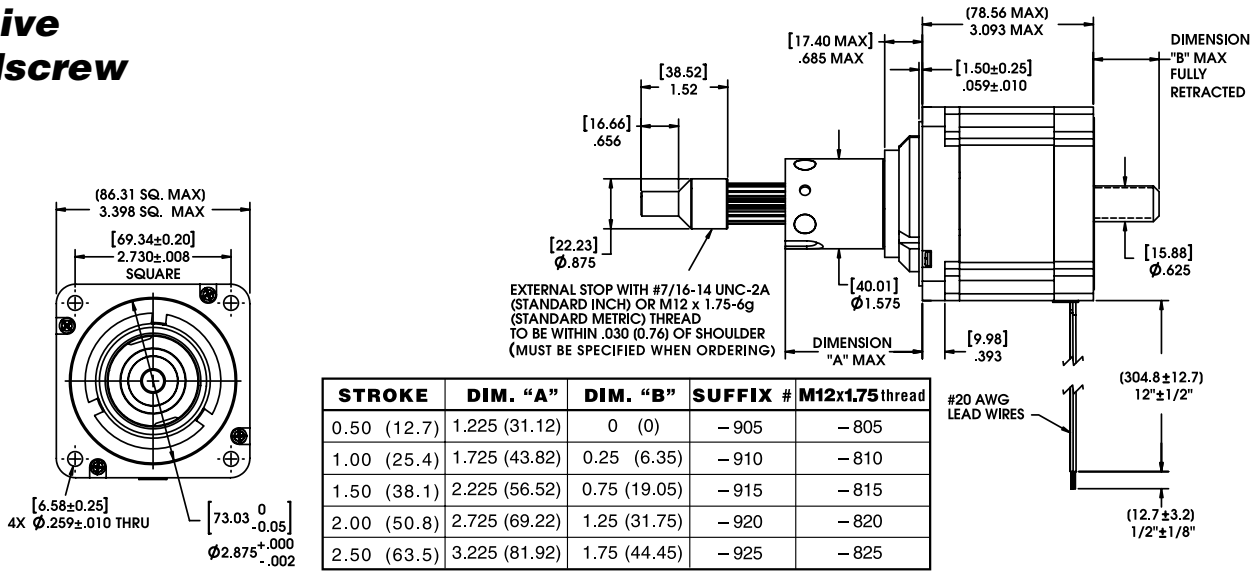

STROKE	DIM. "A"	DIM. "B"	SUFFIX #	M12x1.75 thread
0.50 (12.7)	1.225 (31.12)	0 (0)	–905	–805
1.00 (25.4)	1.725 (43.82)	0.25 (6.35)	–910	–810
1.50 (38.1)	2.225 (56.52)	0.75 (19.05)	–915	–815
2.00 (50.8)	2.725 (69.22)	1.25 (31.75)	–920	–820
2.50 (63.5)	3.225 (81.92)	1.75 (44.45)	–925	–825

Non-Captive Leadscrew

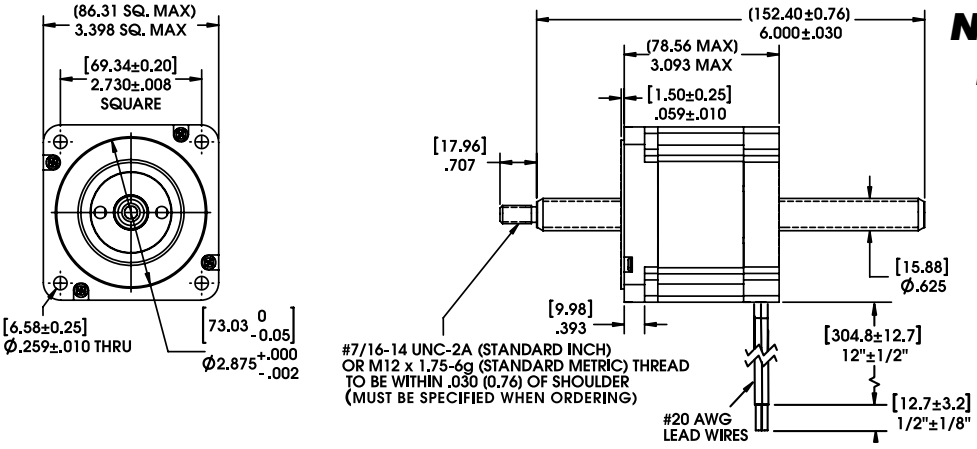

External Linear

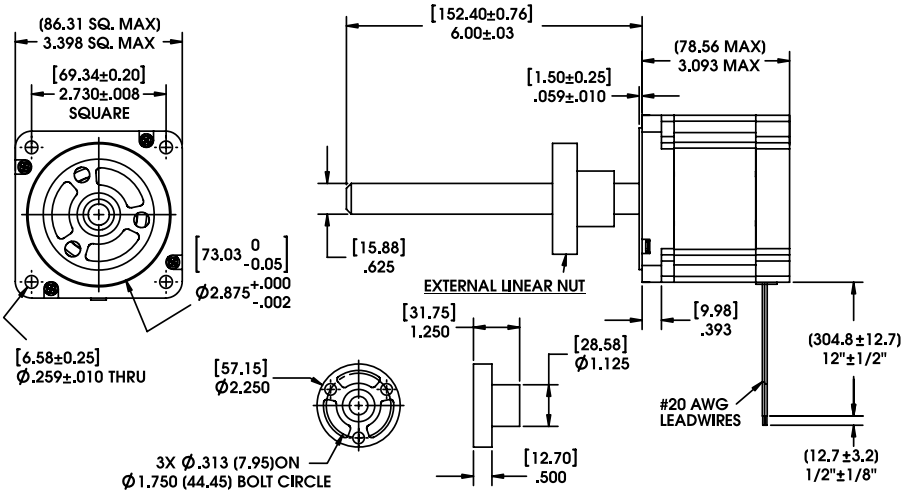

87000 Series: Size 34 Performance Curves

FORCE vs. PULSE RATE

Bipolar • Chopper • 100% Duty Cycle

Ø .625 (15.88) Leadscrew

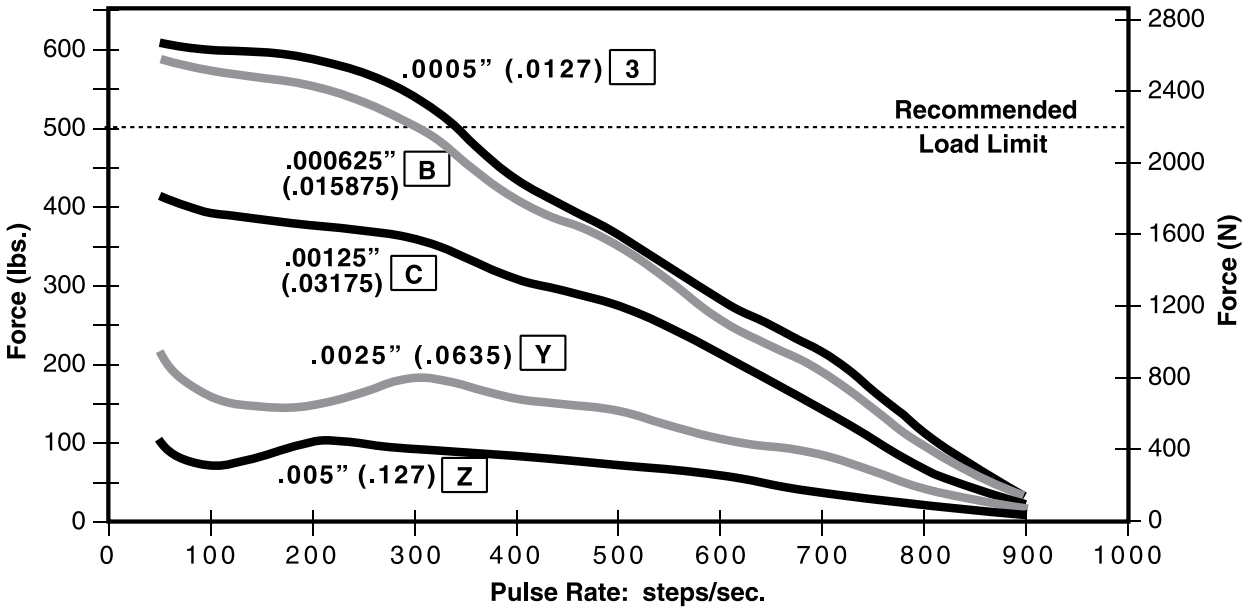

FORCE vs. LINEAR VELOCITY

Bipolar • Chopper • 100% Duty Cycle

Ø .625 (15.88) Leadscrew

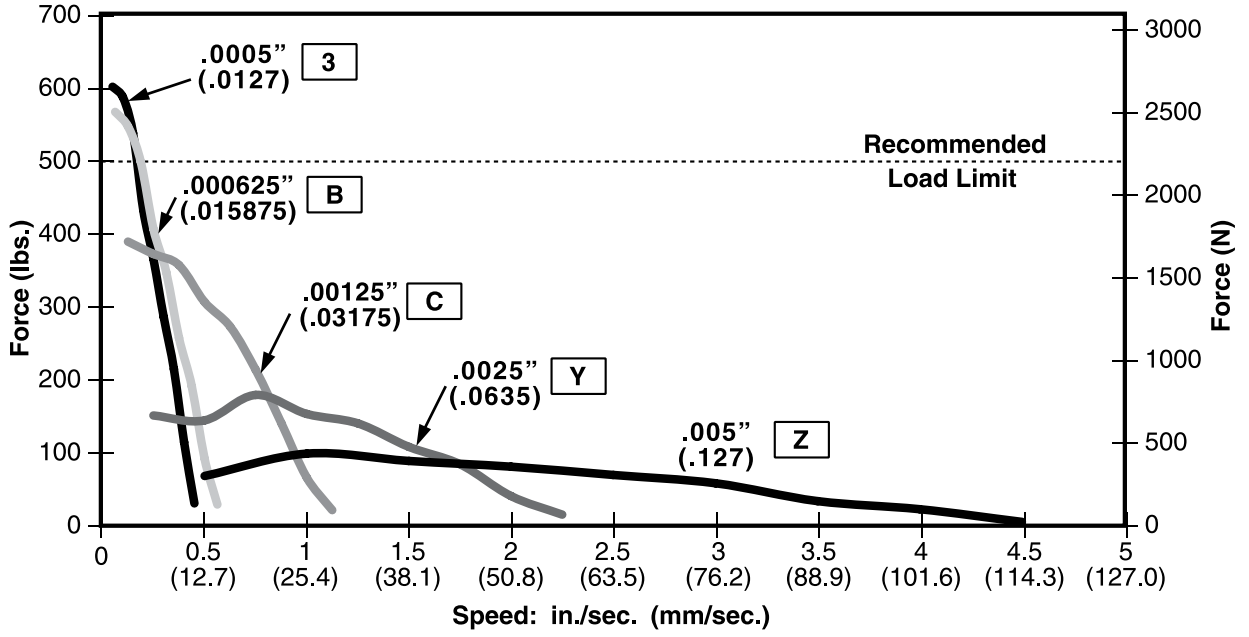

NOTE: All chopper drive curves were created with a 5 volt motor and a 75 volt power supply.

Ramping can increase the performance of a motor either by increasing the top speed or getting a heavier load accelerated up to speed faster. Also, deceleration can be used to stop the motor without overshoot.

With L/R drives peak force and speeds are reduced, using a unipolar drive will yield a further 30% force reduction.

Haydon Kerk Motion Solutions, Inc. • www.HaydonKerk.com • Phone: 800.243.2715 • International: 203.756.7441

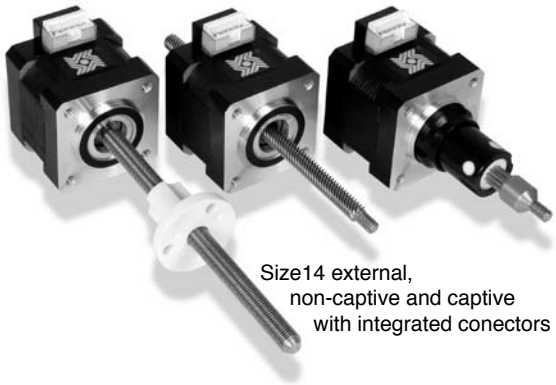

Size14 external, non-captive and captive with integrated conectors

Integrated Connectors for Size 11, Size 14 and Size 17 Hybrid Linear Actuators

Hybrid Size 11, Size 14 and Size 17 linear actuators are available with an integrated connector. Offered alone or with a harness assembly, this connector is RoHS compliant and features a positive latch in order for high connection integrity. The connector is rated up to 3 amps and the mating connector will handle a range of wire gauges from 22 to 28. This motor is ideal for those that want to plug in directly to pre existing harnesses. In addition to standard configurations, Haydon Kerk Motion Solutions™ can custom design this motor to meet your specific application requirements.

Dimensional Drawing: Series 28000 Size 11 with Integrated Connector

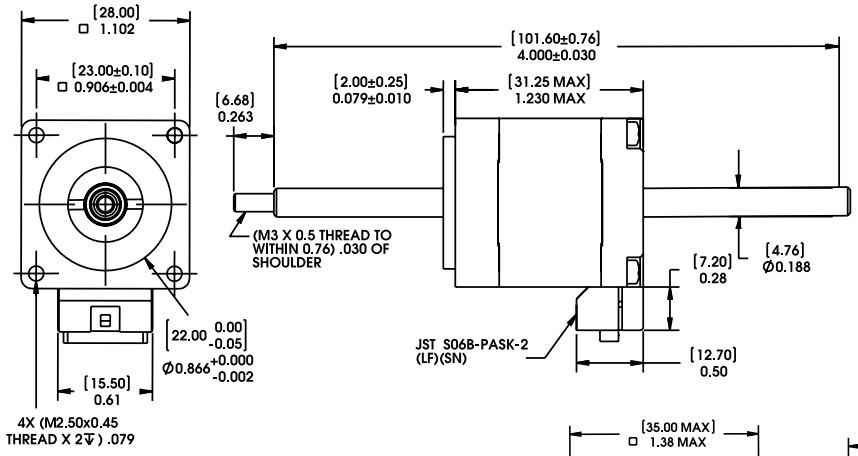

Mating Connector:
JST part number PAP-06V-S
Wire to Board Connector:
JST part number SPHD-001T-P0.5

Pin #	Bipolar	Unipolar
1	Phase 2 Start	Phase 2 Start
2	Open	Phase 2 Common
3	Phase 2 Finish	Phase 2 Finish
4	Phase 1 Finish	Phase 1 Finish
5	Open	Phase 1 Common
6	Phase 1 Start	Phase 1 Start

Dimensional Drawing: 35000 Series Size 14 with Integrated Connector

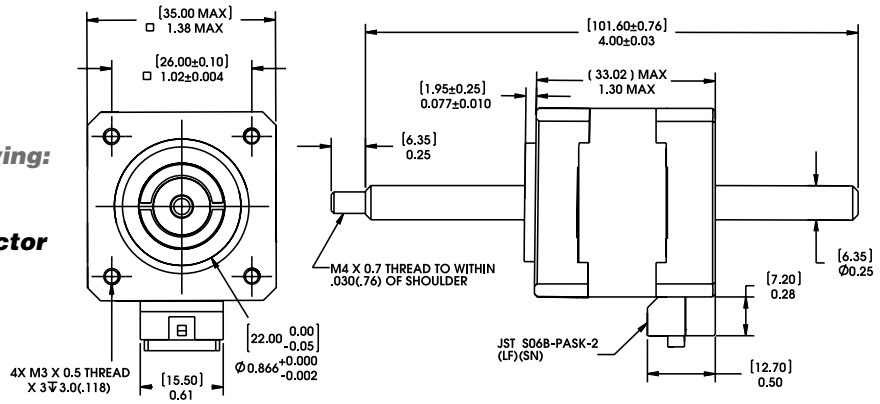

Dimensional Drawing: 43000 Series Size 17 with Integrated Connector

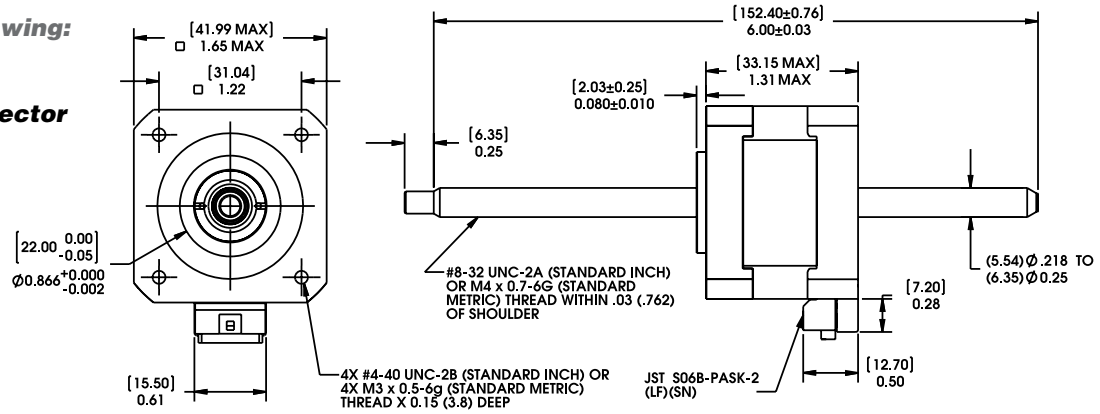

Encoders designed for all sizes of hybrid linear actuators

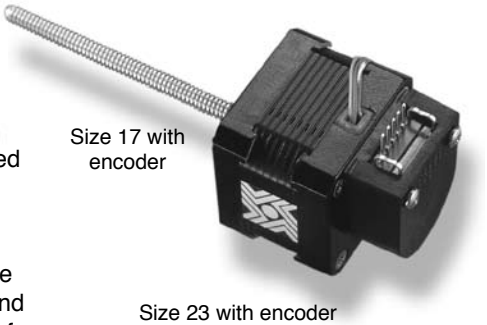

Size 17 with encoder

Size 23 with encoder

All Haydon™ hybrid linear actuators are available with specifically designed encoders for applications that require feedback. The compact optical incremental encoder design is available with two channel quadrature TTL squarewave outputs. An optional index is also available as a 3rd channel. The Size 8 encoder provides resolutions for applications that require 250 and 300 counts per revolution. The Size 11, 14 and 17 encoder provides resolutions for applications that require 200, 400 and 1,000 counts per revolution. The Size 23 and 34 encoder is offered in resolutions of 200, 400, 1,000 and 2,000 counts per revolution. Encoders are available for all motor configurations – captive, non-captive and external linear.

Simplicity and low cost make the encoders ideal for both high and low volume motion control applications. The internal monolithic electronic module converts the real-time shaft angle, speed, and direction into TTL compatible outputs. The encoder module incorporates a lensed LED light source and monolithic photodetector array with signal shaping electronics to produce the two channel bounceless TTL outputs.

Electrical Specifications

	Minimum	Typical	Maximum	Units
Input voltage	4.5	5.0	5.5	VDC
Output signals	4.5	5.0	5.5	VDC

- 2 channel quadrature TTL squarewave outputs.
- Channel B leads A for a clockwise rotation of the rotor viewed from the encoder cover.
- Tracks at speeds of 0 to 100,000 cycles/sec.
- Optional index available as a 3rd channel (one pulse per revolution).

Operating Temperature

	Minimum	Maximum
Size 8	- 10°C (14°F)	85°C (185°F)
Size 11, 14, 17, 23, 34	- 40°C (- 40°F)	100°C (212°F)

Mechanical Specifications

	Maximum
Acceleration	250,000 rad/sec^2
Vibration (5 Hz to 2 kHz)	20 g

Resolution

4 standard Cycles Per Revolution **(CPR)** or *Pulses Per Revolution **(PPR)***

Size 8 Encoder

CPR	250	300
PPR	*1000*	*1200*

Size 11, 14 & 17 Encoders

CPR	200	400	1000*
PPR	*800*	*1600*	*4000**

Others are available.

Size 23 and 34 Encoders

CPR	200	400*	1000	2000
PPR	*800*	*1600**	*4000*	*8000*

*Index Pulse Channel not available.

Single Ended Encoder Pinout Size 8

Connector Pin #	Description
1	+5 VDC Power
2	Channel A
3	Ground
4	Channel B

Single Ended Encoder Pinout Size 11, 14, 17 23, 34

Connector Pin #	Description
1	Ground
2	Index (optional)
3	Channel A
4	+5 VDC Power
5	Channel B

Differential Ended Encoder Pinout Size 11, 14, 17 23, 34

Connector Pin #	Description
1	Ground
2	Ground
3	– Index
4	+ Index
5	Channel A –
6	Channel A +
7	+5 VDC Power
8	+5 VDC Power
9	Channel B –
10	Channel B +

Encoder Dimensional Drawings

E4 21000 Series Size 8

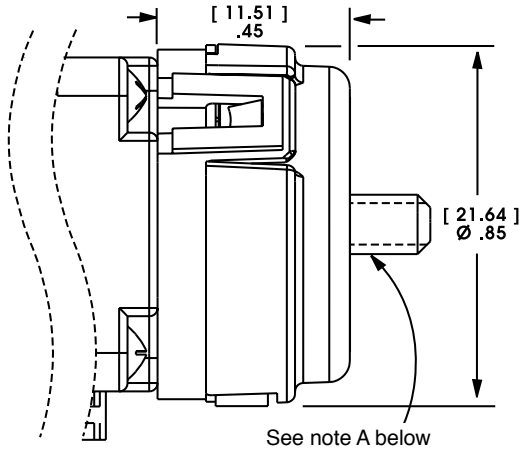

E5 28000 Series Size 11

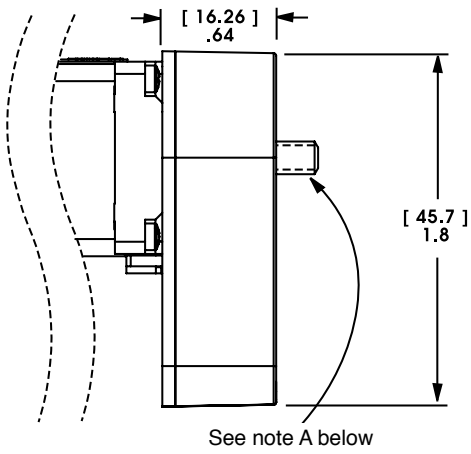

E5 35000 Series Size 14

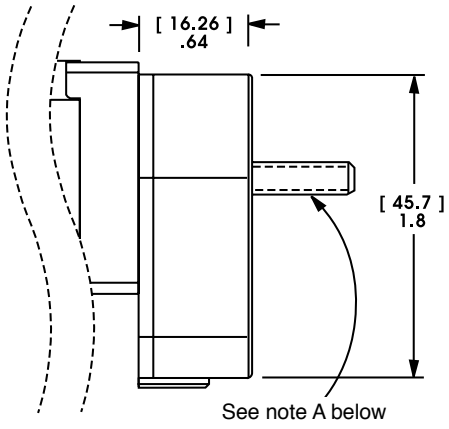

E5 43000 Series Size 17

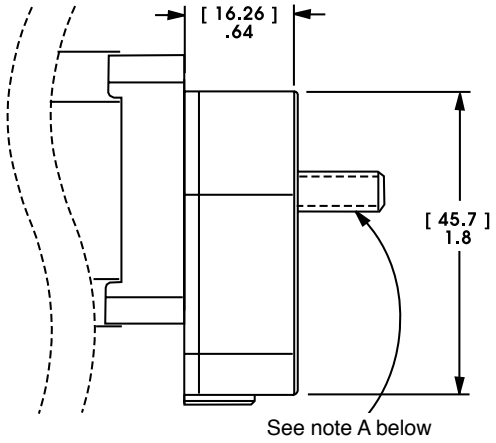

E3 57000 Series Size 23

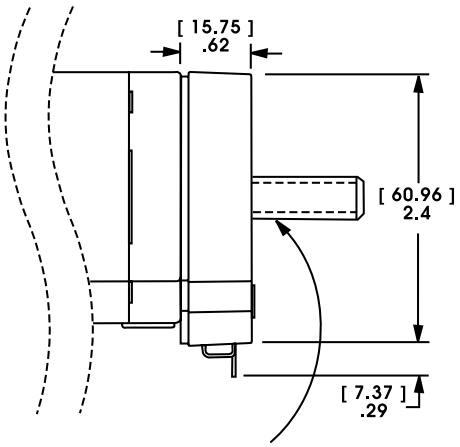

E3 87000 Series Size 34

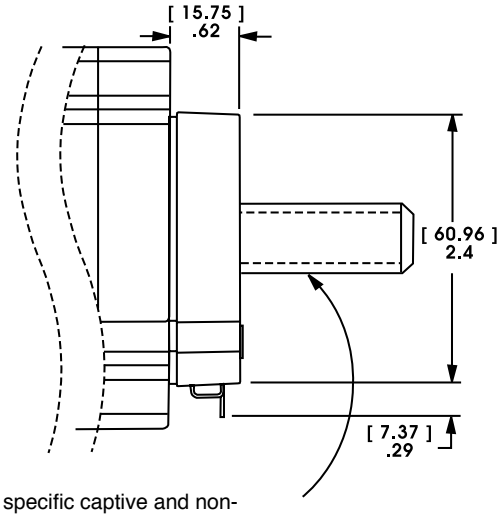

Note A: Leadscrew extends beyond encoder on specific captive and non-captive motors. External linear shaft extension is available upon request.

Optional Assemblies for Hybrids

Encoder Ready Option for all sizes of Hybrids

Haydon Hybrid Linear Actuators can now be manufactured as an encoder ready actuator. These encoder ready actuators can be used to install several popular hollow shaft encoders. They are available with an extended rotor journal and a threaded rear housing. The motors use a proprietary manufacturing process which incorporates engineering thermoplastics in the rotor drive nut and a stainless steel Acme leadscrew that allows the motor to be much more efficient and durable than today's more commonly used V-thread/bronze nut configurations.

Extended Rotor Journal for all Hybrid sizes

Haydon Hybrid Linear Actuators are available with an extended rotor journal. This extended rotor journal can be used for encoder installation, manual adjustment, or flag installation for a positioning sensor.

Size 23 Mounting Face Plate for Size 17 Hybrids

Haydon Kerk Motion Solutions, Inc. offers a size 23 mounting pattern for its hybrid Size 17 linear actuators. The advantage of using this configuration is to replace existing costly, inefficient Size 23 linear actuators with a lower cost, high performance Size 17 motor.

Home Position Switch for all Hybrids (except Size 8)

A miniature electronic home position switch capable of monitoring the home positions of linear actuators. The switch mounts on the rear sleeve of captive linear motors and allows the user to identify start, stop or home postions. When ordering motors with the home position switch, the part number should be preceded by an "S" prefix.

End of Stroke Proximity Sensor for all sizes of Hybrids

The sensor incorporates a hall effect device, which is activated by a rare earth magnet embedded in the end of the internal screw. The compact profile of the sensor allows for installation in limited space applications.

The sensor has virtually unlimited cycle life. Special cabling and connectors can also be provided. When ordering motors with the proximity sensor, the part number should be preceded by a "P" prefix.

Black Ice™ Teflon® Coated Leadscrews for all Hybrids (certain conditions apply)

Where applications require the use of a "greaseless" screw and nut interface Haydon Kerk Motion Solutions™ offers Teflon® coated leadscrews.

A "dry" (non-lubricated) Teflon coated leadscrew provides improved performance in both life and thrust as compared to a conventional stainless steel leadscrew. Teflon can be applied to a wide variety of lead-screw pitches and is available for Haydon™ brand captive, non-captive and external linear linear actuators.

Integrated Anti-backlash Nut for all Hybrids (except Size 34)

All sizes (except Size 34) of captive and non-captive hybrid stepper motors can be equipped with an integral anti-backlash feature.

There is a normal backlash between the lead screw and integral rotor nut. Haydon™ actuators are designed for millions of cycles. However, over time additional backlash could increase and eventually double. Haydon Kerk Motion Solutions™ Integrated Anti-backlash nut can eliminate all backlash. Designed specifically for the Haydon captive and non-captive hybrid motors, these nuts use an opposing spring force to eliminate backlash between the screw and the nut interface. The nuts will self-compensate and accommodate any wear.

Haydon Kerk Motion Solutions™ application engineers can help you select the appropriate preload for your application.

A single unit that axially moves a component to an insertion position and then rotates it

In certain applications, it is required to have both rotary and linear motion. Such an application, for example, is in the robotic picking and placing of components where it may be required to axially move a component to an insertion position and then rotate the component to screw it in place. Another type of application requiring a shaft, which may selectively rotate and/or reciprocate, is in the precise control of laparoscopic and other such medical instruments.

In either type of application, it is frequently required that the linear motion be locked while rotary motion takes place. Conventional motor arrangements are often complicated and heavy, a substantial disadvantage for robotics applications. A problem with motors having linear motion is that the motors frequently provide inadequate output shaft support when heavy side loads are imposed on the output shafts.

The Haydon™ line of dual motion actuators provides independent linear and rotary motion from a compact package. The actuators are based on unique, patented designs and incorporate proven motor technology. These units simplify product development by replacing what would otherwise be far more bulky and complex mechanisms. Another feature of this design is to provide an electric motor in which linear and rotary motions are controllable independently of one another.

A limitless number of operating parameters are offered allowing each device to be custom manufactured according to customer specific application requirements. For a rotary/linear motor, it is desirable that the linear and rotary motions be controllable independently of one another. These devices can be run using a standard two axis stepper motor driver. Performance can be enhanced using chopper and/or microstepping drives.

For linear actuator data for the dual motion actuators please see the 35000 Series (Size 14) and 43000 Series (Size 17) hybrid linear actuators sections of this catalog. The curves for the rotary portion of the motors appear in the pages that follow.

Part Number Construction: Dual Motion Actuators

LR	35	K	H	4	J	–	05	–	910

Prefix

LR = Linear/ Rotary

Series number designation

35 = 35000
Available Series:
35000
43000

(Series numbers represent width² of motor body)

Rotary Step Angle

H = 1.8°
K = 0.9°
M = 1.8° Double Stack
P = 0.9° Double Stack

Linear Step Angle

H = 1.8°
K = 0.9°
M = 1.8° Double Stack
P = 0.9° Double Stack

Coils

4 = Bipolar (4 wire)
6 = Unipolar (6 wire)

Code ID Resolution Travel/Step

(Example: J = travels .00048-in per step)

(Refer to travel / step chart found on each Series product page.)

Voltage

(Example: 05 = 5 VDC; 12 = 12 VDC) Custom V available

Suffix:

Stroke
Example: –910 = 1-in (26 mm)

–XXX = Special or custom
(Special part numbers for custom screw lengths and design options will require an issued 3 digit suffix number. Please contact our sales or applications engineering department for assistance.)

EXAMPLE:

LR35KH4AB-05-910 = Dual motion, 35000 Series (Size 14, 1.5-in, 35 mm sq.), 0.9° rotary, 1.8° linear, bipolar coils, .00048-in (0.0121 mm), 5 Volts DC, 1-in (26 mm) stroke

Dimensional Drawings

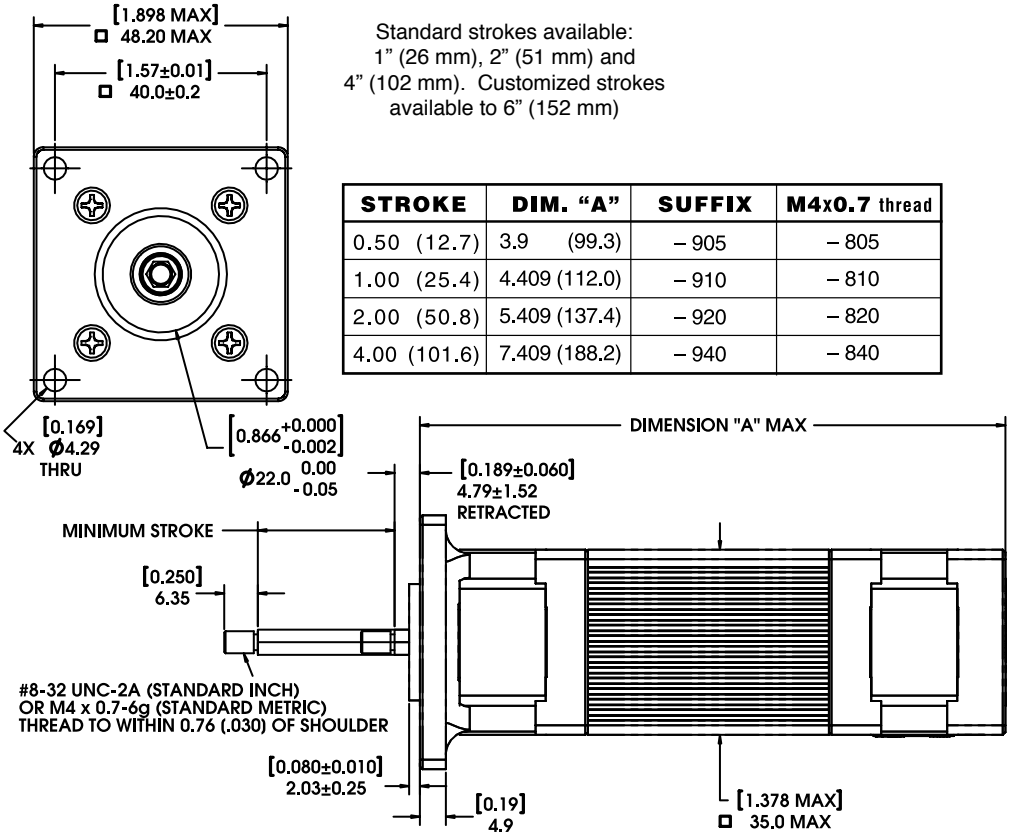

Standard strokes available:
1" (26 mm), 2" (51 mm) and
4" (102 mm). Customized strokes
available to 6" (152 mm)

STROKE	DIM. "A"	SUFFIX	M4x0.7 thread
0.50 (12.7)	3.9 (99.3)	– 905	– 805
1.00 (25.4)	4.409 (112.0)	– 910	– 810
2.00 (50.8)	5.409 (137.4)	– 920	– 820
4.00 (101.6)	7.409 (188.2)	– 940	– 840

Technical Specification

Linear Travel / Step inches	mm	Order Code I.D.
0.000098*	0.0025	AA
0.00012	0.0030*	N
0.00019*	0.005	AB
0.00024	0.0060*	K
0.00039*	0.01	AC
0.00048	0.0121*	J
0.00078*	0.02	AD
0.00157*	0.04	AE

*Values truncated

Standard motors are Class B rated for maximum temperature of 130°C.

35000 Series Size 14 • Rotary Function • Bipolar • 100% Duty Cycle

Torque curves for 35000 Series Linear Actuators. See FORCE/SPEED curves for 35000 Series Linear Actuator on pages 68 and 69.

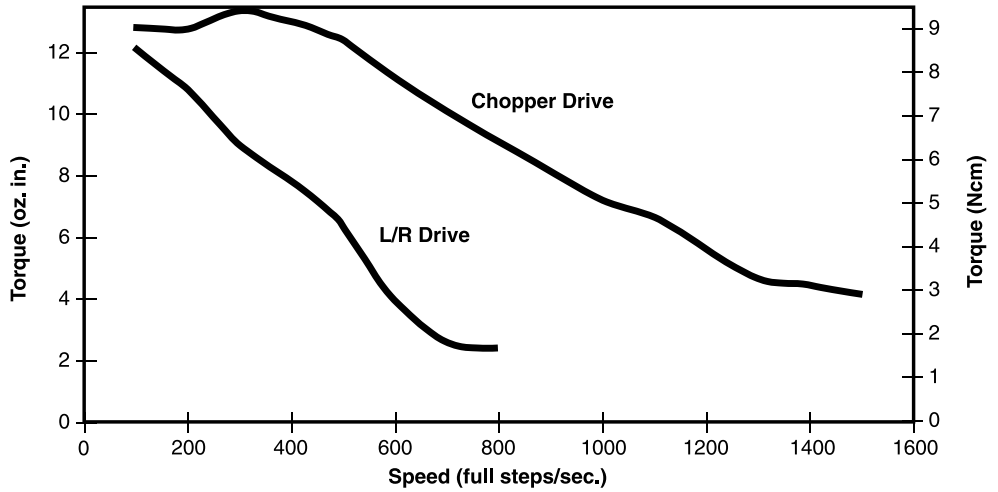

NOTE: All chopper drive curves were created with a 5 volt motor and a 40 volt power supply.

Ramping can increase the performance of a motor either by increasing the top speed or getting a heavier load accelerated up to speed faster. Also, deceleration can be used to stop the motor without overshoot.

With L/R drives peak force and speeds are reduced, using a unipolar drive will yield a further 30% force reduction.

Technical Specification

Linear Travel / Step inches	mm	Order Code I.D.
0.000078*	0.00198*	V
0.00012	0.0030*	N
0.000156259	0.0039*	P
0.0003125	0.0079*	A
0.0004167	0.0105*	S
0.00048	0.0121*	J
0.0005	0.0127	3
0.000625	0.0158*	B
0.00078*	0.02	AD
0.0008333	0.0211*	T
0.00096	0.0243*	Q
0.001	0.0245	1
0.00125	0.0317*	C
0.00192	0.0487*	R
0.002	0.0508	2

*Values truncated

Standard motors are Class B rated for maximum temperature of 130°C.

Dimensional Drawings

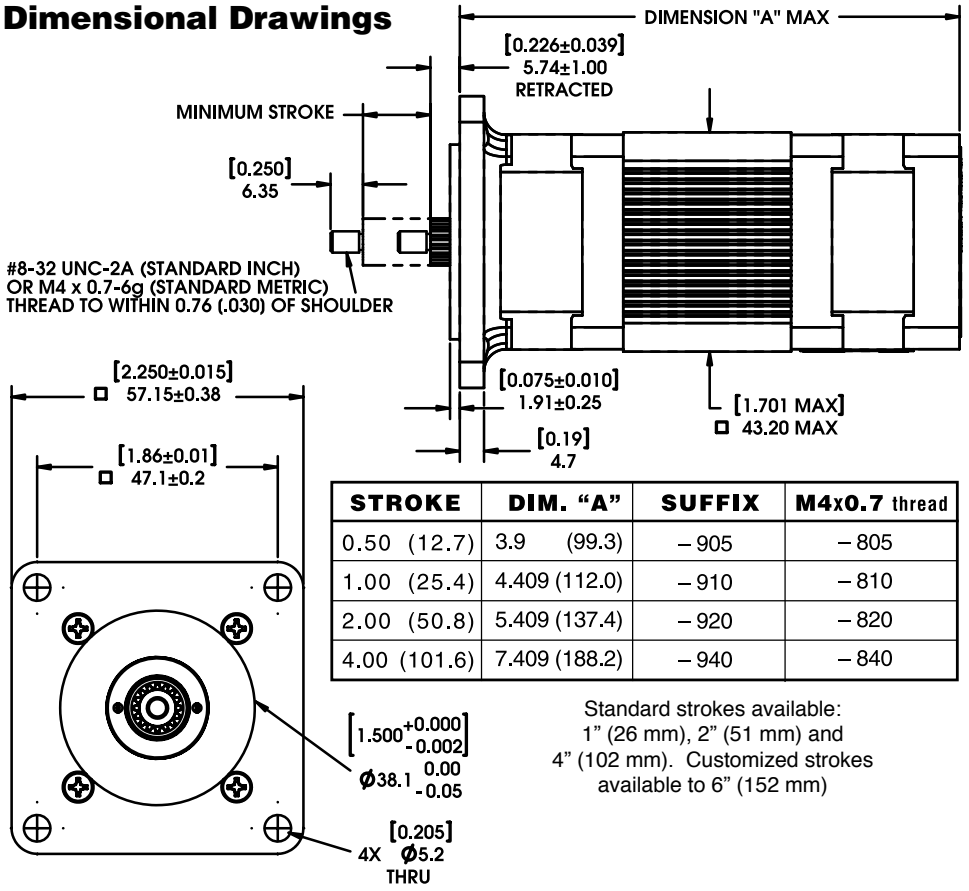

STROKE	DIM. "A"	SUFFIX	M4x0.7 thread
0.50 (12.7)	3.9 (99.3)	– 905	– 805
1.00 (25.4)	4.409 (112.0)	– 910	– 810
2.00 (50.8)	5.409 (137.4)	– 920	– 820
4.00 (101.6)	7.409 (188.2)	– 940	– 840

Standard strokes available: 1" (26 mm), 2" (51 mm) and 4" (102 mm). Customized strokes available to 6" (152 mm)

43000 Series Size 17 • Rotary Function • Bipolar • 100% Duty Cycle

Torque curves for 43000 Series Linear Actuators. See FORCE/SPEED curves for 43000 Series Linear Actuator on pages 77 and 78.

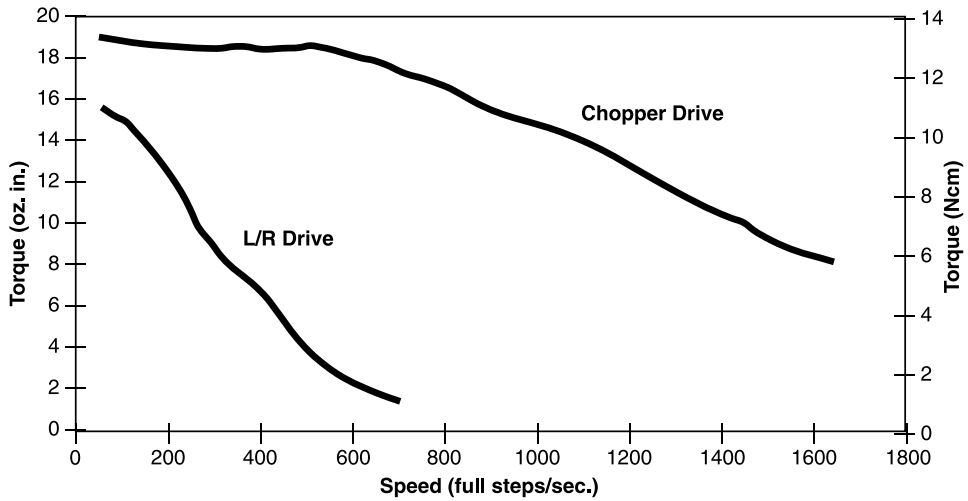

NOTE: All chopper drive curves were created with a 5 volt motor and a 40 volt power supply.

Ramping can increase the performance of a motor either by increasing the top speed or getting a heavier load accelerated up to speed faster. Also, deceleration can be used to stop the motor without overshoot.

With L/R drives peak force and speeds are reduced, using a unipolar drive will yield a further 30% force reduction.

Can-Stack Linear Actuators

Haydon Kerk Motion Solutions, Inc. • www.HaydonKerk.com • Phone: 800.243.2715 • International: 203.756.7441

The Haydon™ line of linear actuators provides both a broader range and, for a given size, significantly higher thrust than previously available from mini-steppers

Four basic frame sizes are available – Ø 20 mm (.79-in), Ø 26 mm (1-in), Ø 36 mm (1.4-in) and Ø 46 mm (1.8-in) – as well as an extremely compact, Ø 15 mm (.59-in) motor (captive shaft only). The basic motors incorporate a threaded rotor in conjunction with a (lead-screw) shaft to provide rapid linear movement in two directions (inward and outward). Available step increments vary with the motor frame sizes and are dependent on the step angle of the motor and the lead screw pitch. A captive or non-captive shaft (lead-screw) option can be supplied for every basic size. Most of the basic sizes also offer an external linear option. The captive shaft configuration features a built-in "anti-rotation" design whereas the non-captive shaft requires the customer to provide external anti-rotation. Both unipolar and bipolar coil configurations are available.

Unique features impart ruggedness and reliability that assure long life and consistent performance. Rare earth magnets are available for even higher thrust. All basic frame sizes are built with dual ball bearings for greater motion control, precise step accuracy and long life.

For finer steps, the High Resolution 26000 and 36000 Series features the smallest step capability in permanent magnet can-stack linear actuators. And, most of the Haydon™ brand motors can also be electronically micro-stepped for tighter controls.

Applications include medical instrumentation, office equipment, machinery automation, robotics, sophisticated pumping systems and other automated devices which require precise remote controlled linear movement in a broad range of temperature environments.

Identifying the part number codes when ordering Can-Stack linear actuators

E	26	4	4	2	–	05	–	900

Prefix
(only when using the following)

E = External
P = Proximity Sensor
S = Home Switch
T = High Temp.
N = Nema Flange (46000 Series only)
R = Rare Earth Magnet

Series number designation:

26 = 26000

Available Series:
15000
20000
26000
36000
46000

(Series numbers represent diameters of motor body)

Style

1 = 3.75° non-captive
2 = 3.75° captive
3 = 7.5° non-captive
4 = 7.5° captive
4 = 7.5° cap. Use "E" prefix for "External"
5 = 15° captive
5 = 15° cap. Use "E" prefix for "External"
8 = 15° non-captive

Coils

4 = Bipolar (4 wire)
6 = Unipolar (6 wire)

Code ID Resolution Travel/Step

(Example: 2 = travels .002-in per step)

(Refer to travel / step chart found on each Series product page.)

Voltage

(Example: 05 = 5 VDC; 12 = 12 VDC) Custom V available

Suffix:

Stroke
Example: –900 = external linear with grease & flanged nut

Suffix also represents:

–XXX = Special or custom
(Special part numbers for custom screw lengths and design options will require an issued 3 digit suffix number. Please contact our sales or applications engineering department for assistance.)

EXAMPLE:
E26442-05-900 = External linear actuator, 26000 series (Ø26 mm, 1-in), 7.5°, bipolar coils, .002-in travel per step, 5 VDC, with grease and flanged nut.

Screw Length Options: For non-captive and external linear shaft motors various screw lengths are available to accommodate almost any travel requirement.

Optional Threaded End Forms for all Z-Series, 20000, 26000 and 36000 Series Motors

Non-Captive

STANDARD

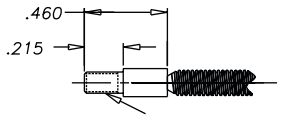

OPTIONAL

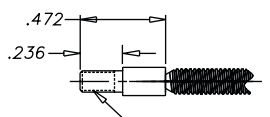

STANDARD

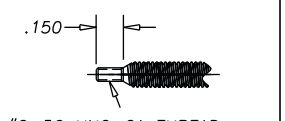

OPTIONAL

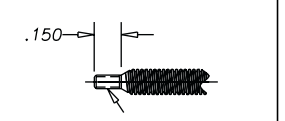

Captive

OPTIONAL

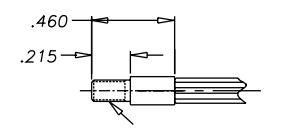

OPTIONAL

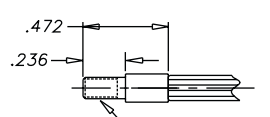

OPTIONAL

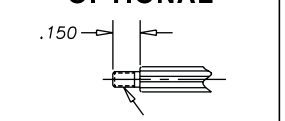

OPTIONAL

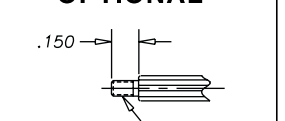

Customized ends and adapters are available for most actuators upon request.

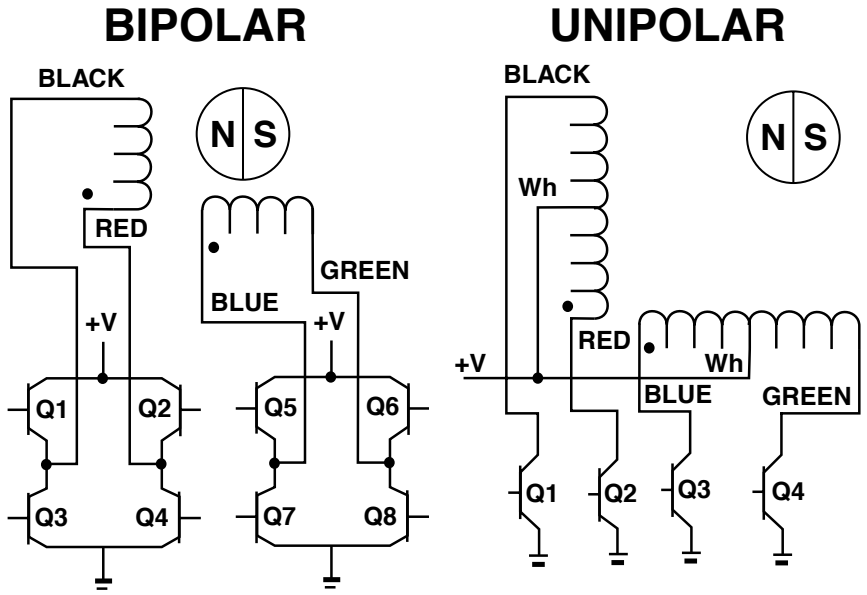

Can-Stack Linear Actuator: Stepping Sequence

Bipolar	Q2-Q3	Q1-Q4	Q6-Q7	Q5-Q8
Unipolar	Q1	Q2	Q3	Q4
Step				
1	ON	OFF	ON	OFF
2	OFF	ON	ON	OFF
3	OFF	ON	OFF	ON
4	ON	OFF	OFF	ON
5	ON	OFF	ON	OFF

Extend ▼ / ▲ Retract

Note: Half stepping is accomplished by inserting an off state between transitioning phases.

Haydon 15000 Series is the world's smallest commercial linear stepper motor.

The motor features bi-directional travel, ball bearings and a light weight. Available with captive leadscrew only.

Salient Characteristics

Ø 15 mm (.59-in) motor				
Wiring		Bipolar		
Part No.	Captive	LC1574W-V		
Step angle		18°		
Winding voltage		4 VDC	5 VDC	12 VDC
Current/phase		0.2 A	0.16 A	0.07 A
Resistance/phase		20 Ω	31 Ω	180 Ω
Inductance/phase		5.6 mH	8.7 mH	48.8 mH
Power consumption		1.6 W		
Temperature rise		135°F Rise (75°C Rise)		
Weight		1 oz (28 g)		
Insulation resistance		100 MΩ		
Stroke		0.5-in. (12.7 mm)		

Linear Travel / Step Screw Ø.197"(5.0 mm) inches	mm	Order Code I.D.
.00079	.02	W

Connectors for Series 15000

Standard Connectors Available	JST PHR-4
	12" (304.8 mm) flying leads
Other Compatible Connectors Available	

Flying Leads

Length inches	mm	Order Code I.D. (add to end on I.D.)
12.0	304.8	– 999

Special drive considerations may be necessary when leaving shaft fully extended or fully retracted.

Contact Haydon Kerk Motion Solutions, Inc. if external linear version is required.

Wiring Diagram

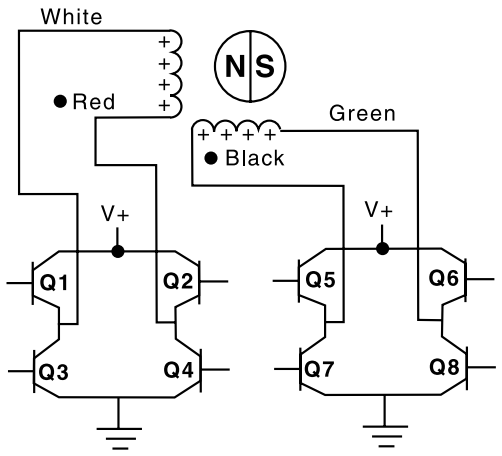

Stepping Sequence

Bipolar Step	Q2-Q3	Q1-Q4	Q6-Q7	Q5-Q8
1	ON	OFF	ON	OFF
2	OFF	ON	ON	OFF
3	OFF	ON	OFF	ON
4	ON	OFF	OFF	ON

Extend ▼ ▲ Retract

Haydon Kerk Motion Solutions, Inc. • www.HaydonKerk.com • Phone: 800.243.2715 • International: 203.756.7441

Captive Shaft (only)

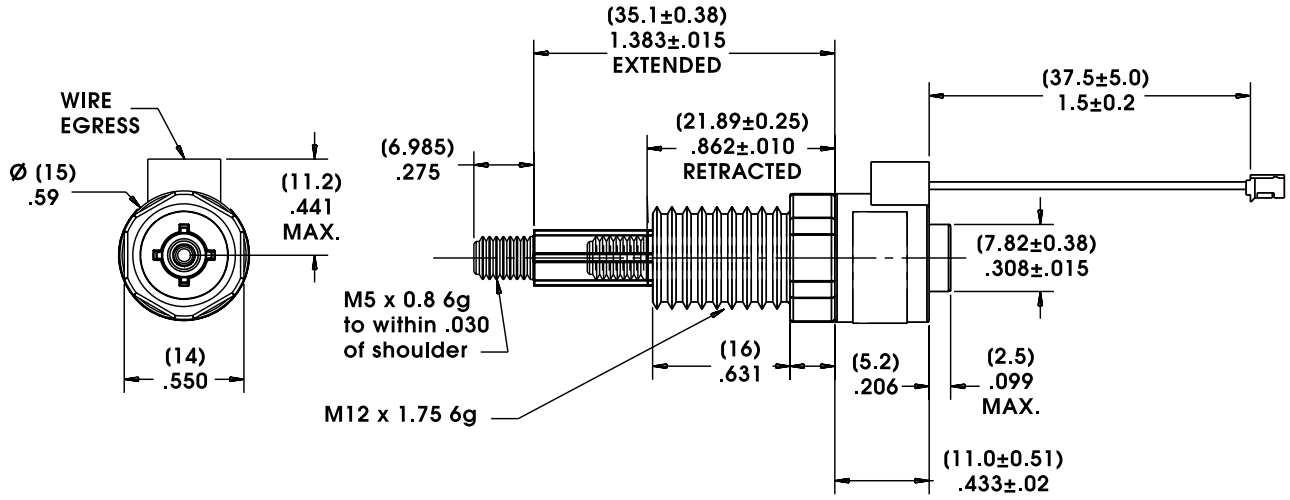

THRUST vs. FULL STEPS/SECOND

L/R Drive • Bipolar • 100% Duty Cycle

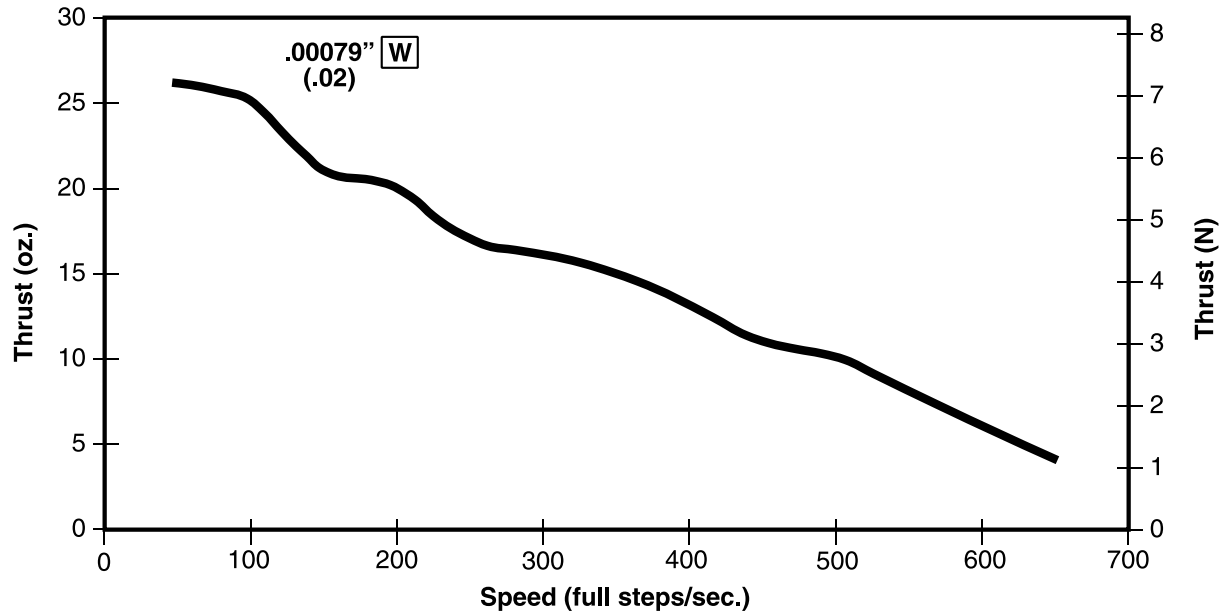

20000 Series Ø 20 mm (.79-in)

Engineered with unique features reliable long life and performance.

Other basic styles available...
- Teflon® lead-screw
- High Temperature Option

Salient Characteristics

Ø 20 mm (.79") motor			
Wiring		Bipolar	
Part No.	Captive	2054X-V	
	Non-captive	2084X-V	
Step angle		15°	
Winding voltage		5 VDC	12 VDC
Current/phase		270 mA	113 mA
Resistance/phase		18.5 Ω	106 Ω
Inductance/phase		5.5 mH	32 mH
Power consumption		2.7 W	
Rotor inertia		0.5 gcm²	
Temperature rise		135°F Rise (75°C Rise)	
Weight		1 oz (28 g)	
Insulation resistance		20 MΩ	

Linear Travel / Step 15° Step Angle inches	mm	Order Code I.D.
0.001	0.0254	1
0.002	0.051	2
0.004	0.102	4

Special drive considerations may be necessary when leaving shaft fully extended or fully retracted.

Captive Shaft

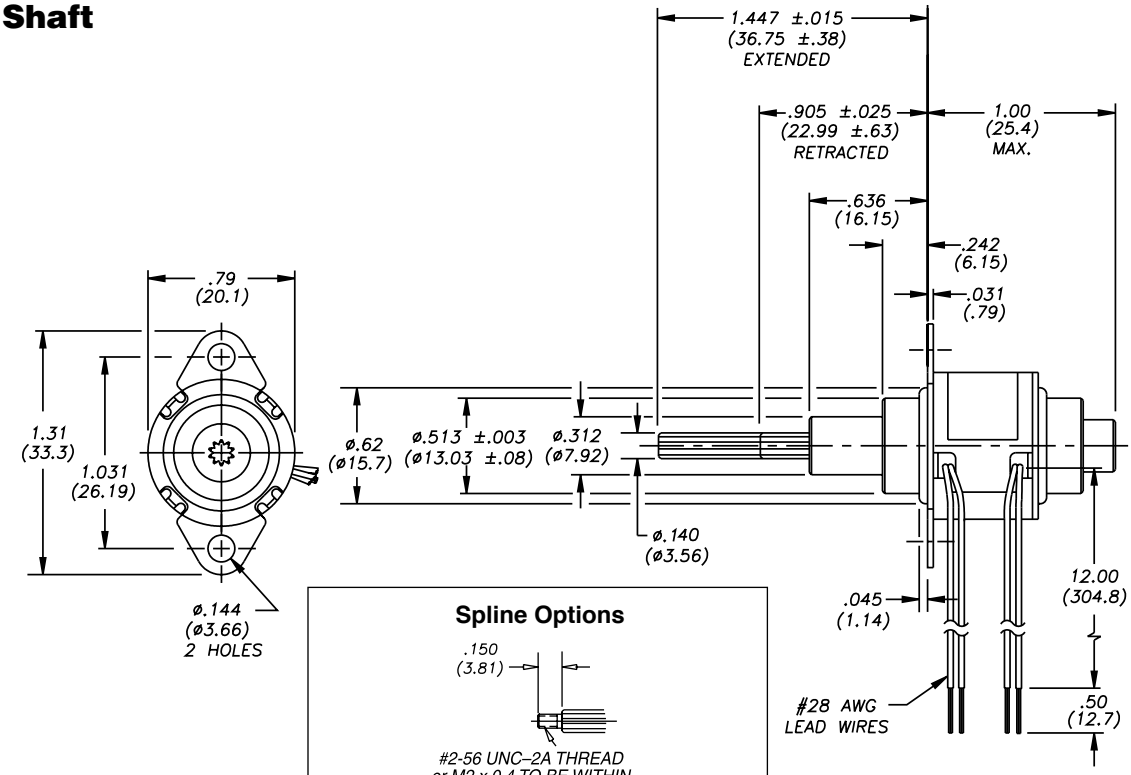

Spline Options

#2-56 UNC–2A THREAD
or M2 x 0.4 TO BE WITHIN
.030 (.76) MAX. OF SHOULDER

Spline is also available with optional #4-40 UNC-2A or M3 x 0.5 threaded adapter as shown in non-captive drawing.

Non-Captive Shaft

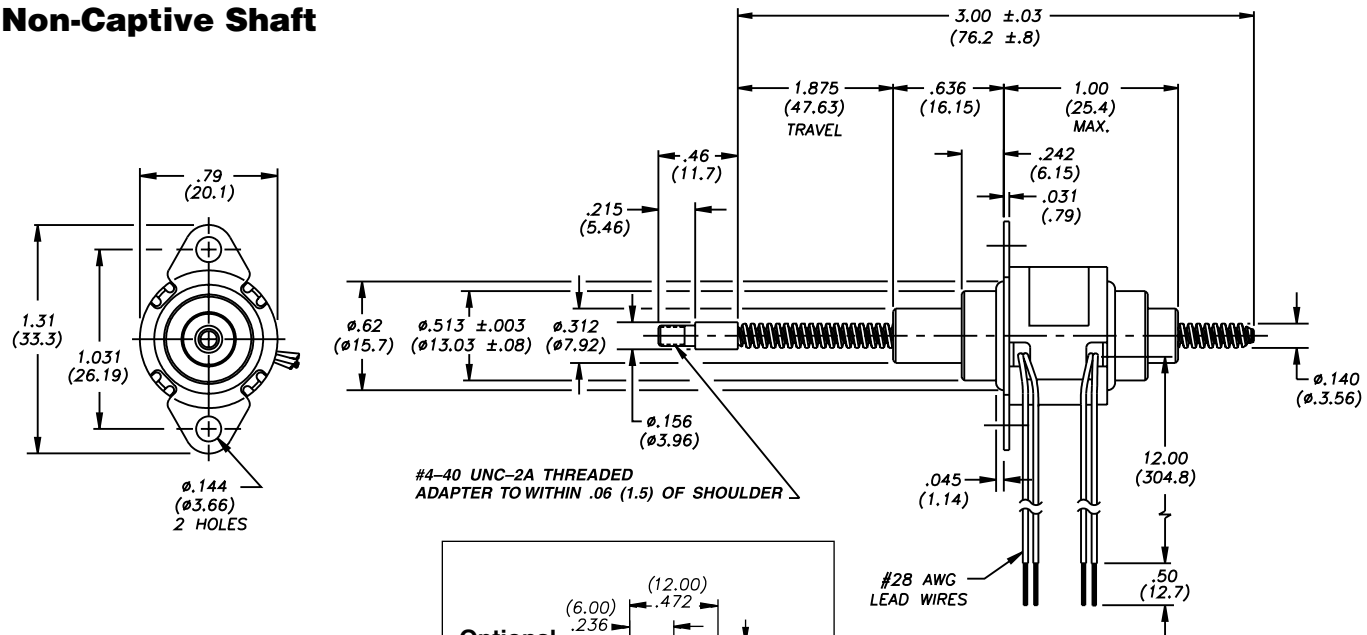

Optional Adapter

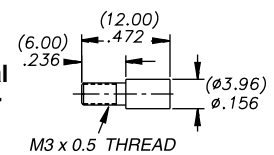

M3 x 0.5 THREAD
TO WITHIN .051 (1.3)
OF SHOULDER

THRUST vs. FULL STEPS/SECOND

L/R Drive • Bipolar • 100% Duty Cycle

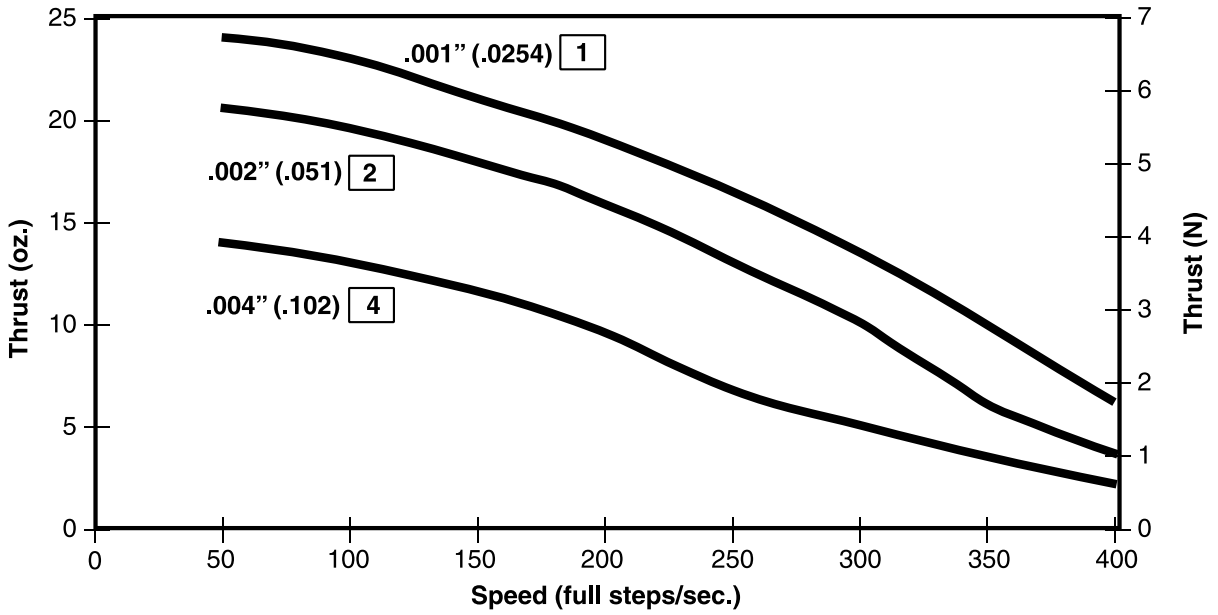

THRUST vs. FULL STEPS/SECOND

L/R Drive • Bipolar • 25% Duty Cycle

25% duty cycle is obtained by a special winding or by running a standard motor at double the rated voltage.

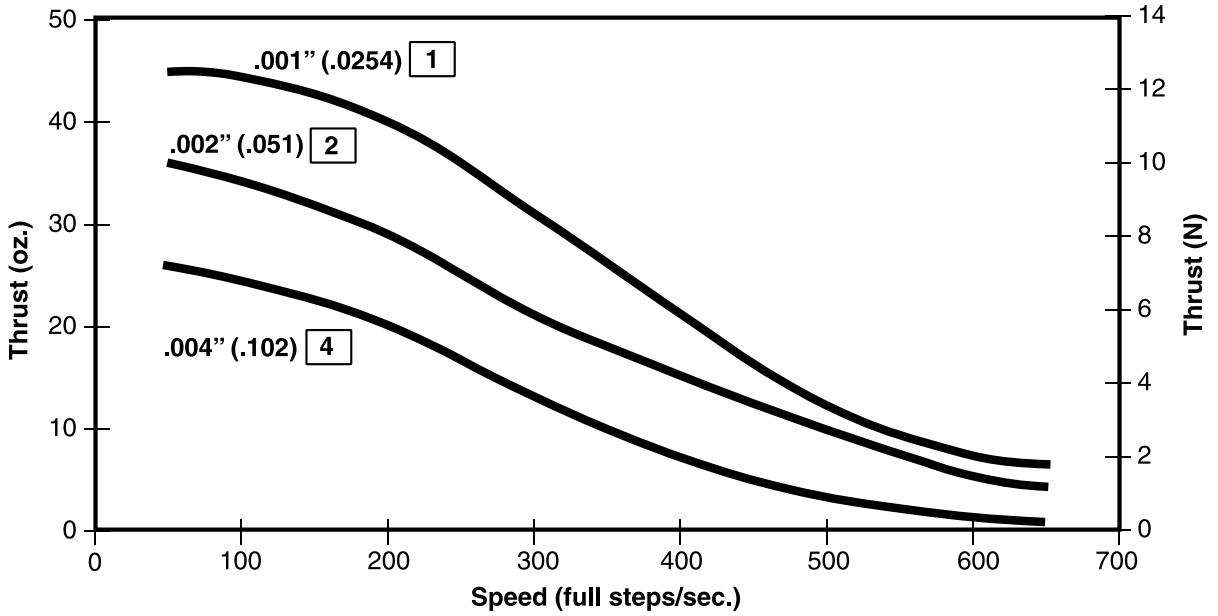

NOTE: Ramping can increase the performance of a motor either by increasing the top speed or getting a heavier load accelerated up to speed faster. Also, deceleration can be used to stop the motor without overshoot.

THRUST vs. FULL STEPS/SECOND

Chopper Drive • Bipolar • 100% Duty Cycle

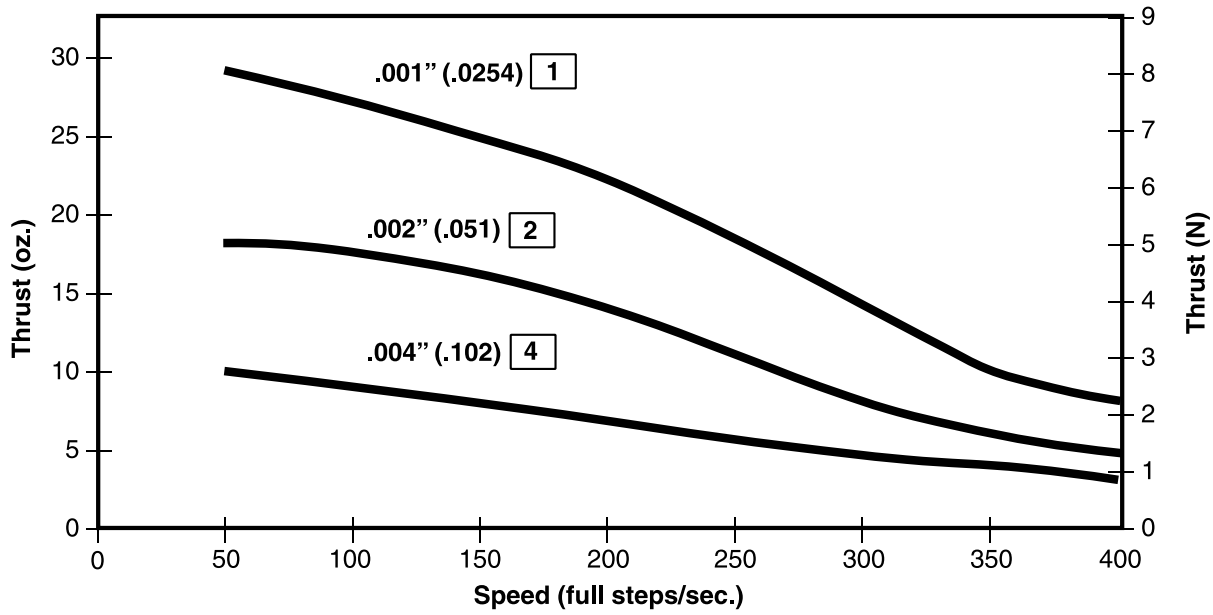

THRUST vs. FULL STEPS/SECOND

Chopper Drive • Bipolar • 25% Duty Cycle

25% duty cycle is obtained by a special winding or by running a standard motor at double the rated voltage.

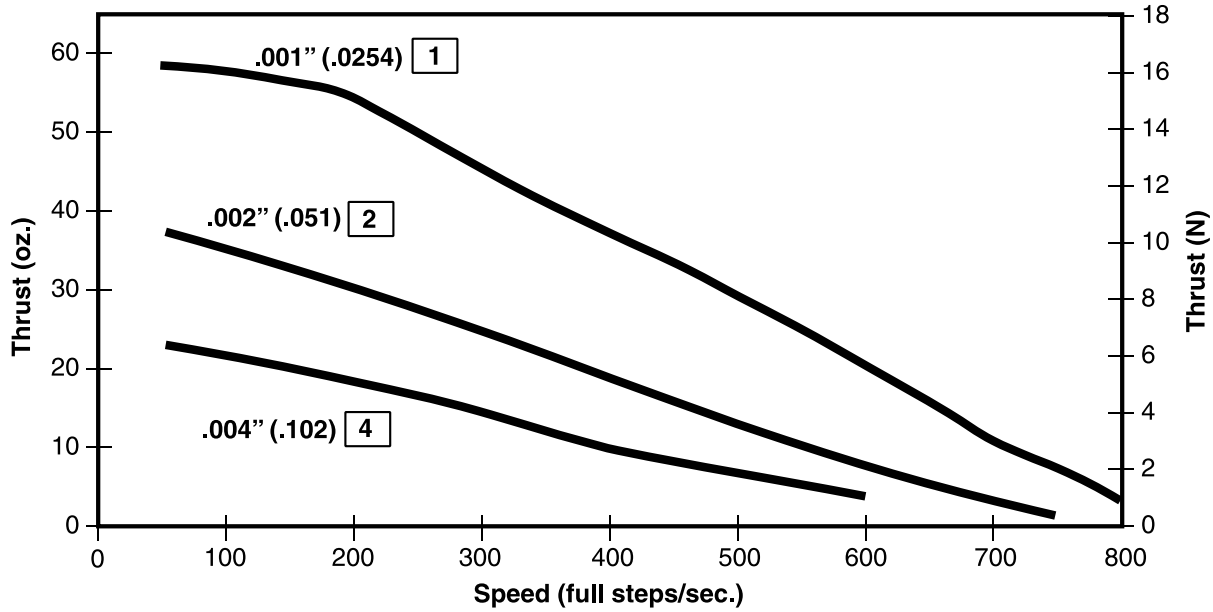

NOTE: All chopper drive curves were created with a 5 Volt motor and a 40 Volt power supply.

Ramping can increase the performance of a motor either by increasing the top speed or getting a heavier load accelerated up to speed faster. Also, deceleration can be used to stop the motor without overshoot.

Z20000 Series economical stepper motors for high volume, applications.

Utilizing rare earth (neodymium) magnets, the Haydon™ Z-Series linear actuators consistently deliver exceptional performance at an economical price. Also available in a special "earless" configuration without a mounting flange, which is ideal for space constrained applications.

Three motors are available... captive, non-captive and external linear. All units are built with reliable dual ball bearings.

Earless Z20000 Series Actuator

Salient Characteristics

Ø 20 mm (.79-in) Z-Series motor			
Wiring		Bipolar	
Part No.	Captive	Z2054X-V	
	Non-captive	Z2084X-V	
	External*	Z2054X-V*	
Step angle		15°	
Winding voltage		5 VDC	12 VDC
Current/phase		250 mA	100 mA
Resistance/phase		20 Ω	118 Ω
Inductance/phase		5.4 mH	27 mH
Power consumption		2.5 W	
Rotor inertia		1.13 gcm^2	
Temperature rise		135°F Rise (75°C Rise)	
Weight		.85 oz. (24.1 g)	
Insulation resistance		20 M Ω	

* When ordering Z-Series External Linear motors, add -900 to end of the Part Number.

Linear Travel / Step 15° Step Angle		Order Code I.D.
inches	mm	
0.001	0.0254	1
0.002	0.051	2
0.004	0.102	4

Special drive considerations may be necessary when leaving shaft fully extended or fully retracted.

Captive Shaft

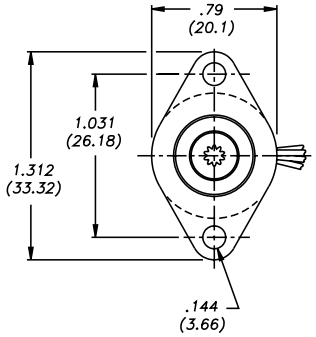

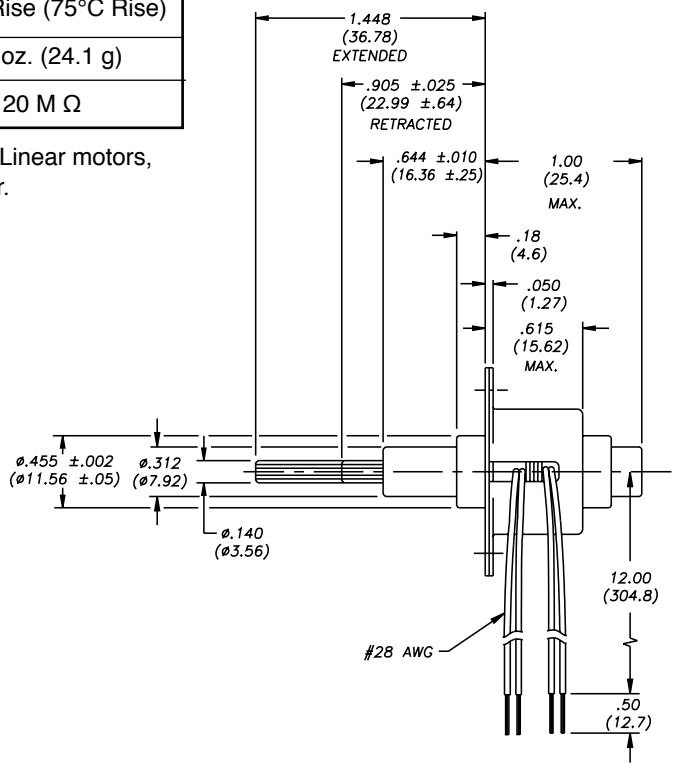

Spline Options

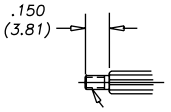

#2-56 UNC–2A THREAD or M2 x 0.4 TO BE WITHIN .030 (.76) MAX. OF SHOULDER

Spline is also available with optional #4-40 UNC-2A or M3 x 0.5 threaded adapter as shown in non-captive drawing.

Non-Captive Shaft

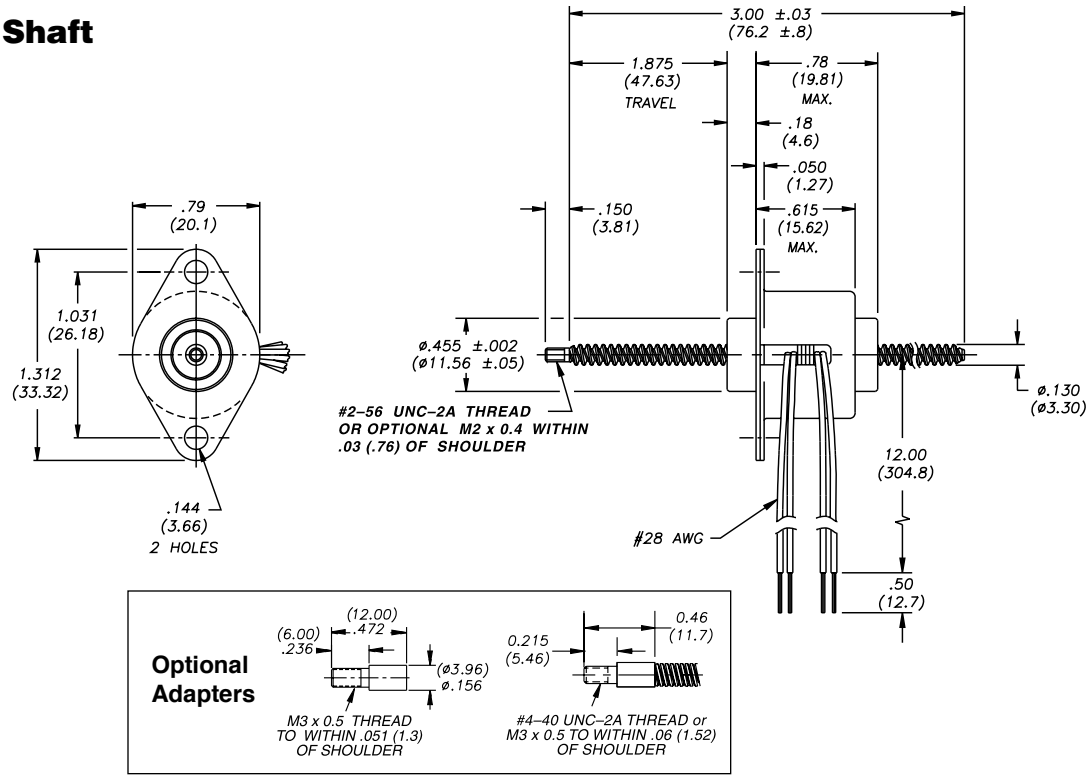

External Linear

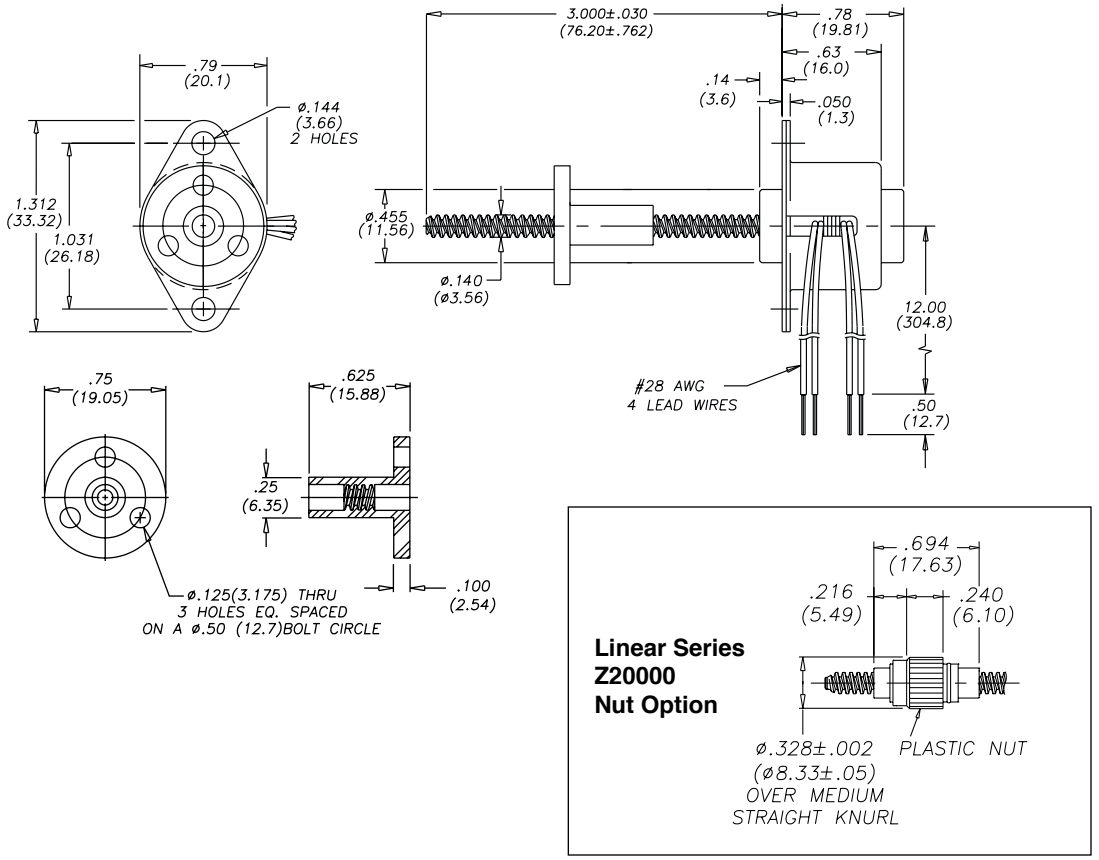

THRUST vs. FULL STEPS/SECOND

L/R Drive • Bipolar • 100% Duty Cycle

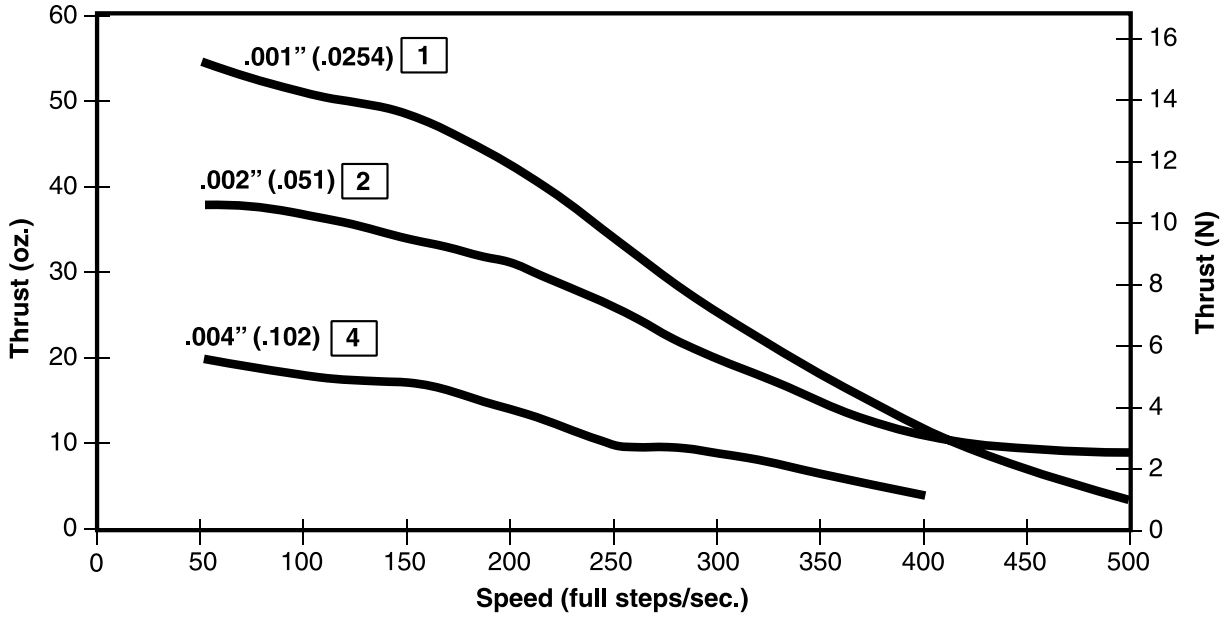

THRUST vs. FULL STEPS/SECOND

L/R Drive • Bipolar • 25% Duty Cycle

25% duty cycle is obtained by a special winding or by running a standard motor at double the rated voltage.

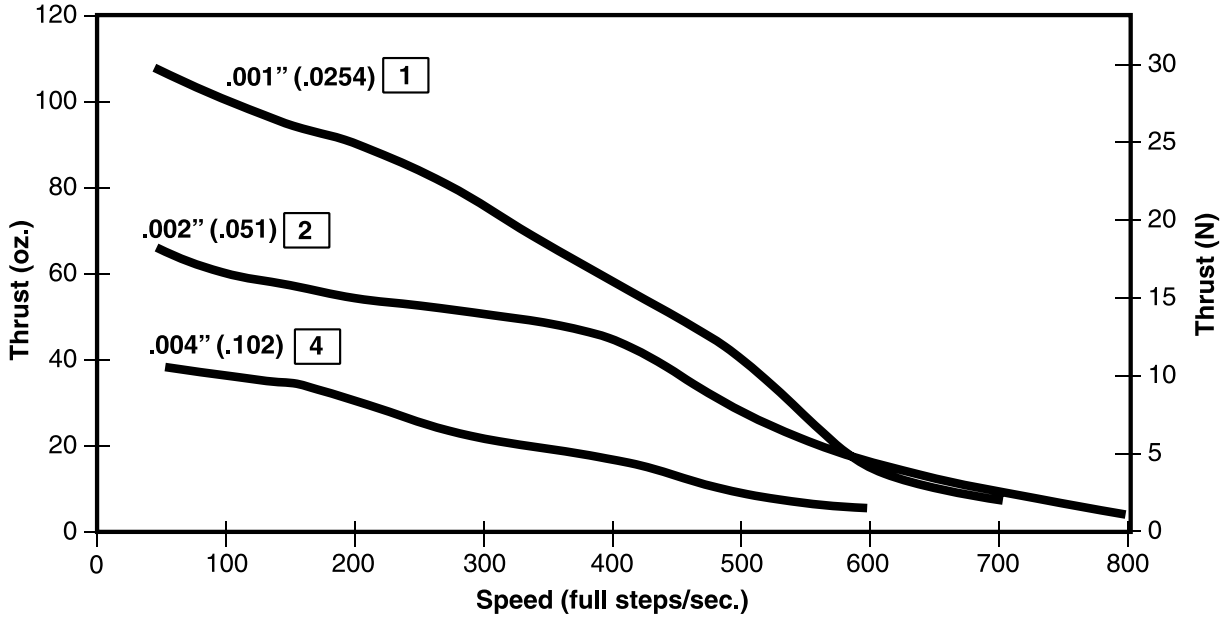

NOTE: Ramping can increase the performance of a motor either by increasing the top speed or getting a heavier load accelerated up to speed faster. Also, deceleration can be used to stop the motor without overshoot.

Haydon Kerk Motion Solutions, Inc. • www.HaydonKerk.com • Phone: 800.243.2715 • International: 203.756.7441

THRUST vs. FULL STEPS/SECOND

Chopper Drive • Bipolar • 100% Duty Cycle

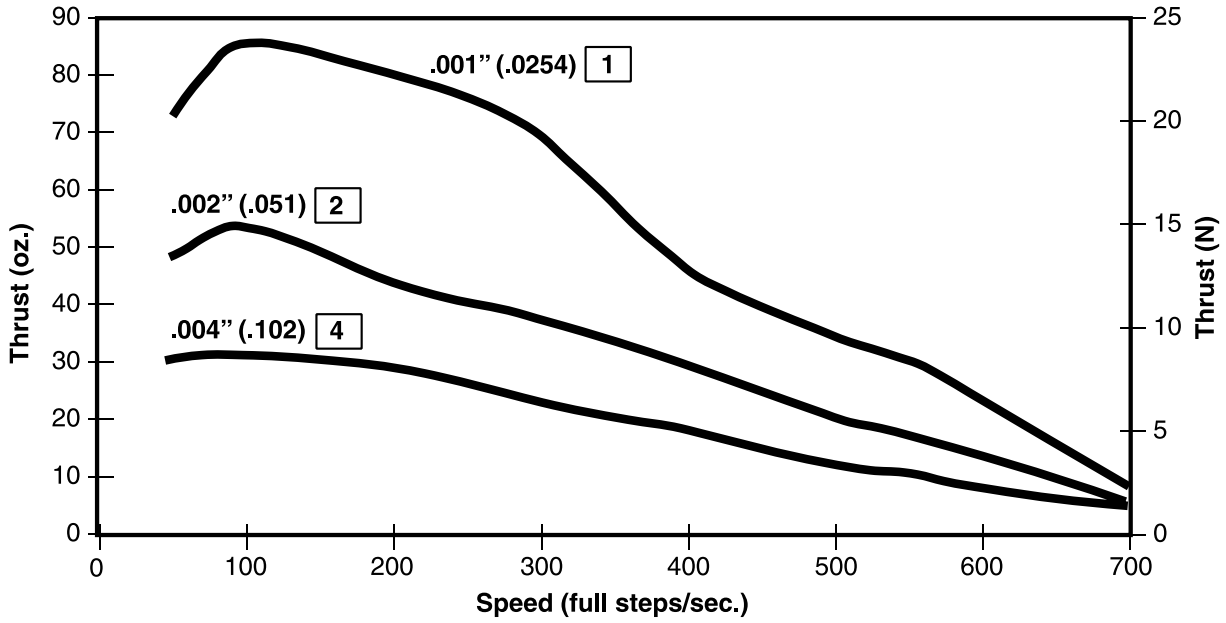

THRUST vs. FULL STEPS/SECOND

Chopper Drive • Bipolar • 25% Duty Cycle

25% duty cycle is obtained by a special winding or by running a standard motor at double the rated voltage.

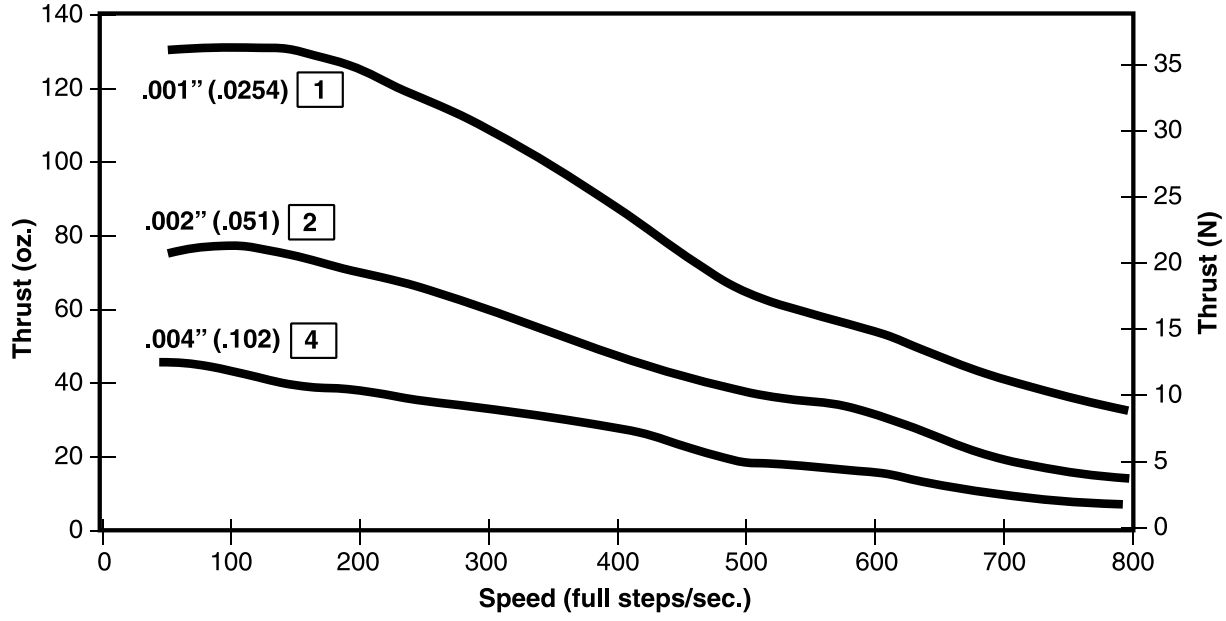

NOTE: All chopper drive curves were created with a 5 Volt motor and a 40 Volt power supply.

Ramping can increase the performance of a motor either by increasing the top speed or getting a heavier load accelerated up to speed faster. Also, deceleration can be used to stop the motor without overshoot.

An industry standard... high versatility, robust performance.

Salient Characteristics

Ø 26 mm (1-in) motor					
Wiring		Bipolar			
Part No.	Captive	2644X-V		2654X-V	
	Non-captive	2634X-V		2684X-V	
	External	E2644X-V		E2654X-V	
Step angle		7.5°		15°	
Winding voltage		5 VDC	12 VDC	5 VDC	12 VDC
Current/phase		340 mA	140 mA	340 mA	140 mA
Resistance/phase		14.7 Ω	84 Ω	14.7 Ω	84 Ω
Inductance/phase		8.5 mH	55 mH	6.7 mH	44 mH
Power consumption		3.4 W			
Rotor inertia		1.2 gcm^2			
Temperature rise		135°F Rise (75°C Rise)			
Weight		1.2 oz (35 g)			
Insulation resistance		20 MΩ			

Ø 26 mm (1-in) motor					
Wiring		Unipolar**			
Part No.	Captive	2646X-V		2656X-V	
	Non-captive	2636X-V		2686X-V	
	External	E2646X-V		E2656X-V	
Step angle		7.5°		15°	
Winding voltage		5 VDC	12 VDC	5 VDC	12 VDC
Current/phase		340 mA	140 mA	340 mA	140 mA
Resistance/phase		14.7 Ω	84 Ω	14.7 Ω	84 Ω
Inductance/phase		4.3 mH	24 mH	3.4 mH	19 mH
Power consumption		3.4 W			
Rotor inertia		1.2 gcm^2			
Temperature rise		135°F Rise (75°C Rise)			
Weight		1.2 oz (35 g)			
Insulation resistance		20 MΩ			

* Unipolar drive gives approximately 30% less thrust than bipolar drive.

Other 260000 Series styles available...

- Z-Series
- High Resolution Series
- Long-Stroke Metric Series
- Teflon® lead-screw
- High Temperature Option

Linear Travel/Step			Order Code I.D.
Step	inches	mm	
7.5° Angle	0.0005	0.013	3
	0.001	0.0254	1
	0.002	0.051	2
15° Angle	0.001	0.0254	1
	0.002	0.051	2
	0.004	0.102	4

Special drive considerations may be necessary when leaving shaft fully extended or fully retracted.

Captive Leadscrew

Spline Options

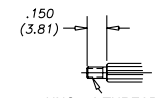

Spline is also available with optional #4-40 UNC-2A or M3 x 0.5 threaded adapter as shown in non-captive drawing.

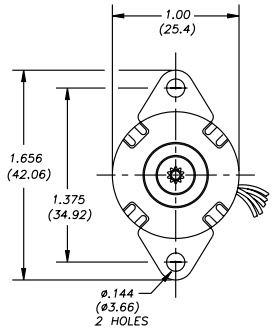

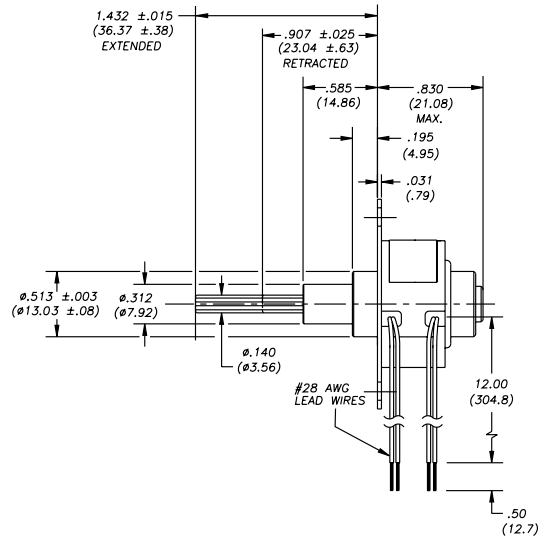

Non-Captive Leadscrew

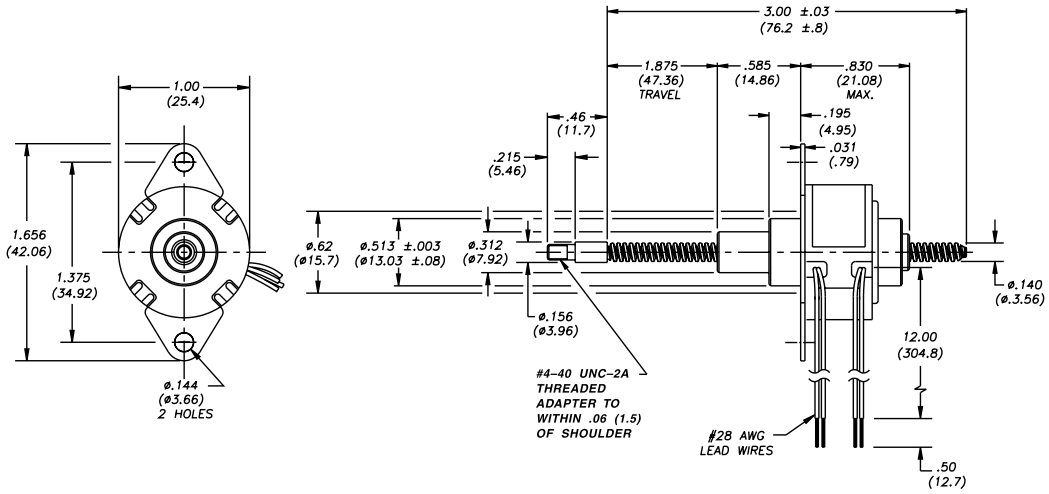

Optional Adapter

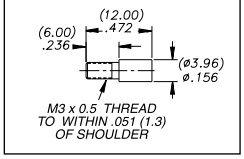

External Linear

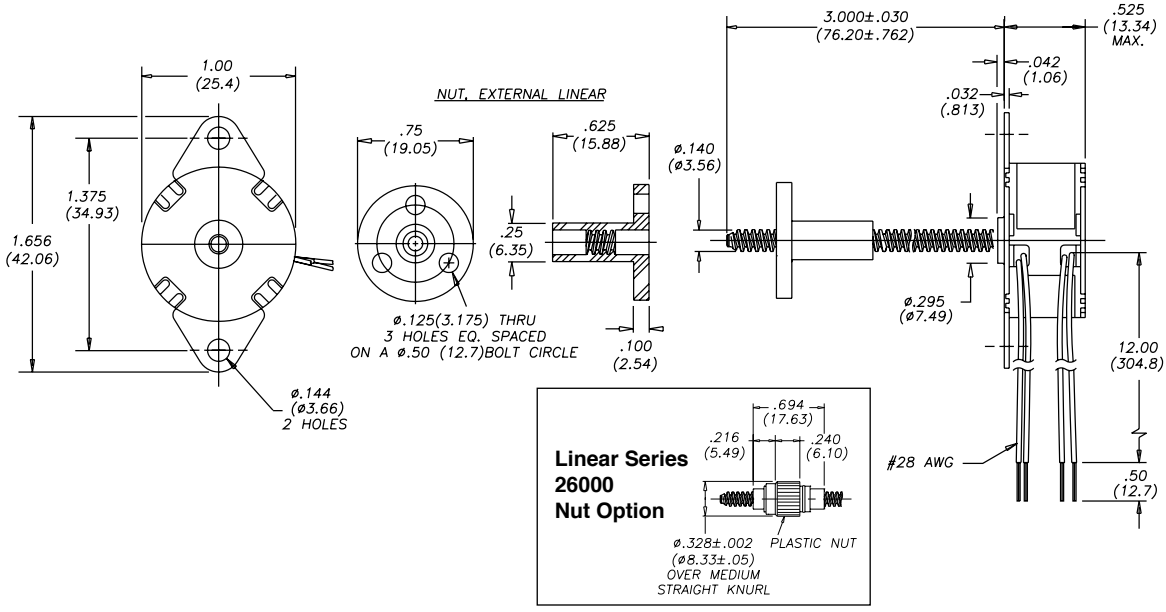

Linear Series 26000 Nut Option

THRUST vs. FULL STEPS/SECOND

L/R Drive • Bipolar • 100% Duty Cycle

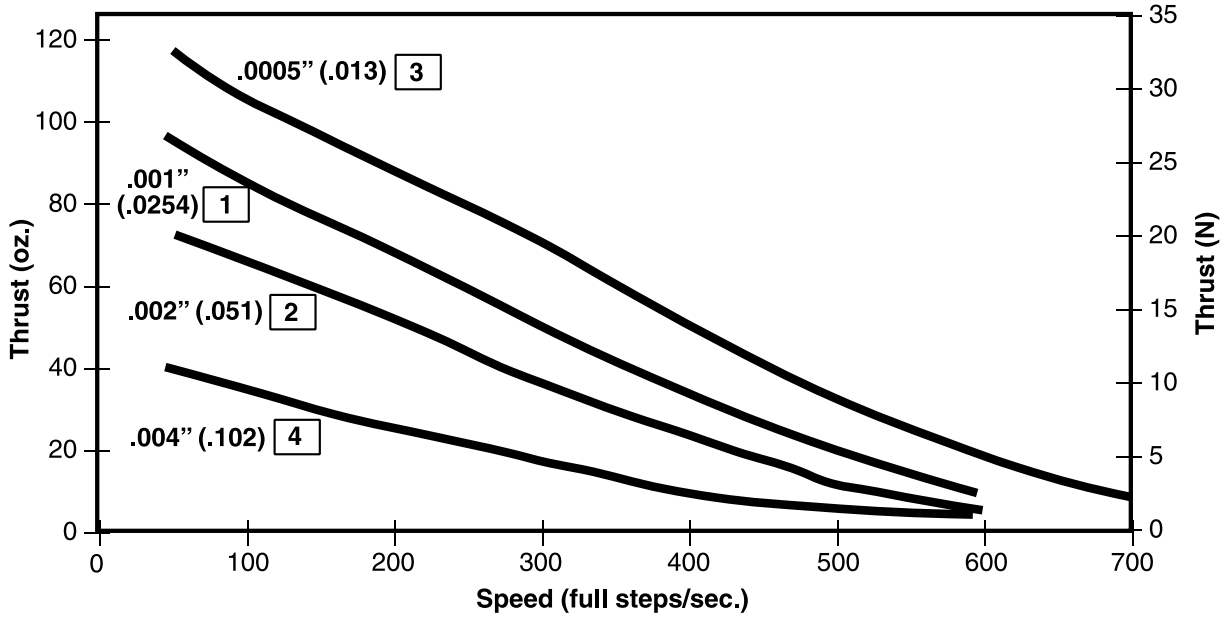

THRUST vs. FULL STEPS/SECOND

L/R Drive • Bipolar • 25% Duty Cycle

25% duty cycle is obtained by a special winding or by running a standard motor at double the rated voltage.

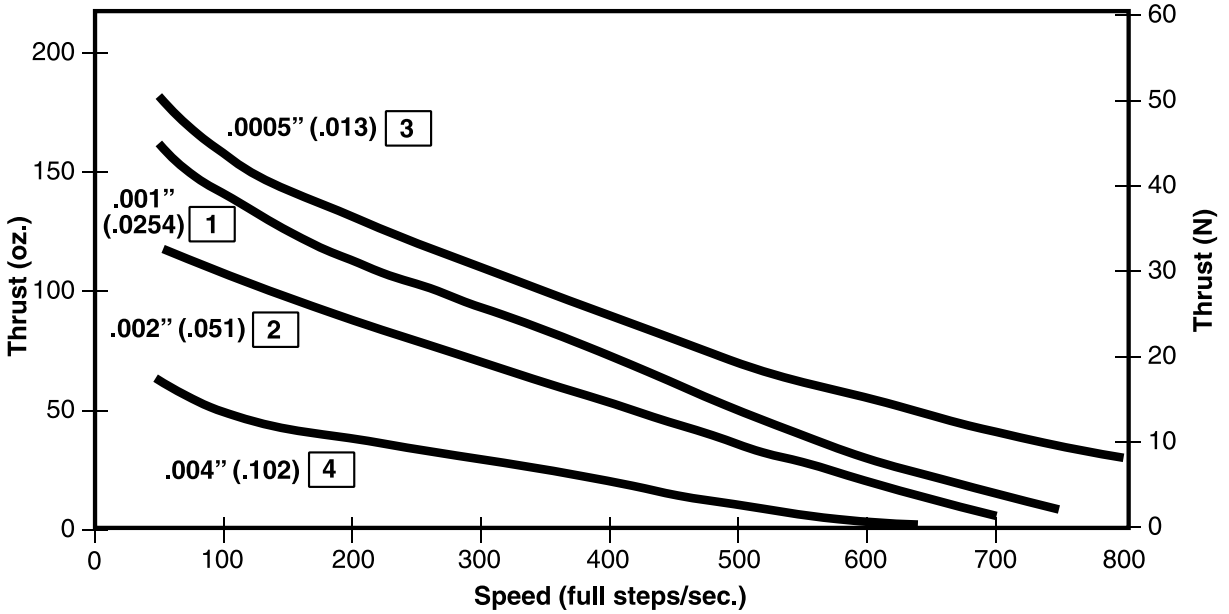

NOTE: Ramping can increase the performance of a motor either by increasing the top speed or getting a heavier load accelerated up to speed faster. Also, deceleration can be used to stop the motor without overshoot.

THRUST vs. FULL STEPS/SECOND

Chopper Drive • Bipolar • 100% Duty Cycle

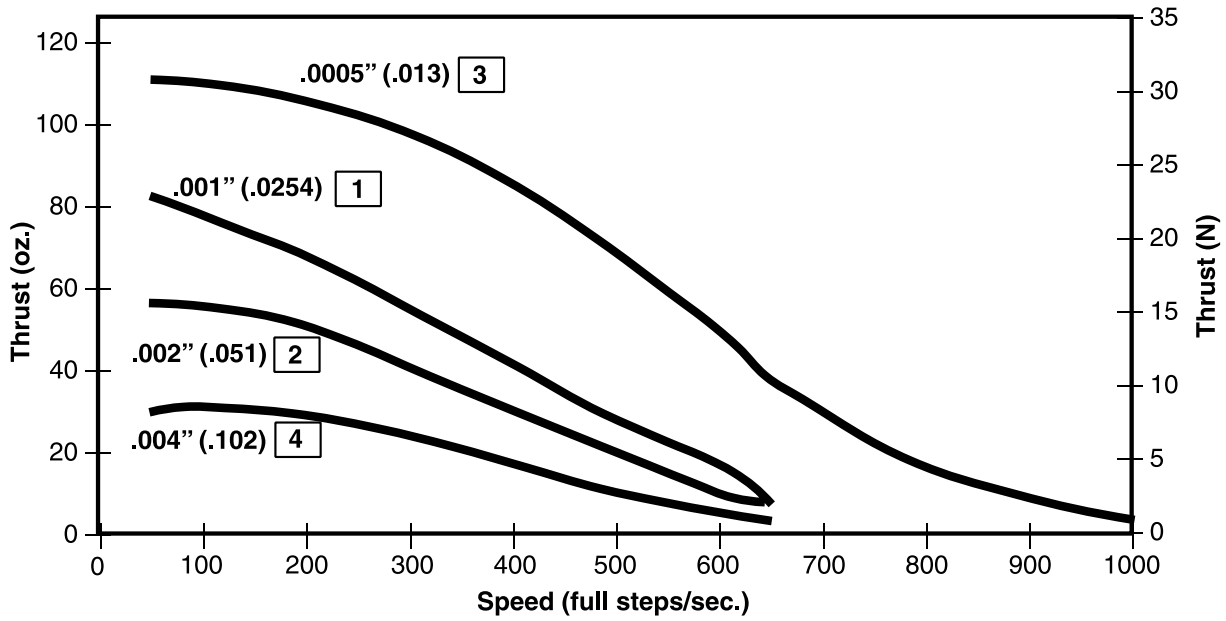

THRUST vs. FULL STEPS/SECOND

Chopper Drive • Bipolar • 25% Duty Cycle

25% duty cycle is obtained by a special winding or by running a standard motor at double the rated voltage.

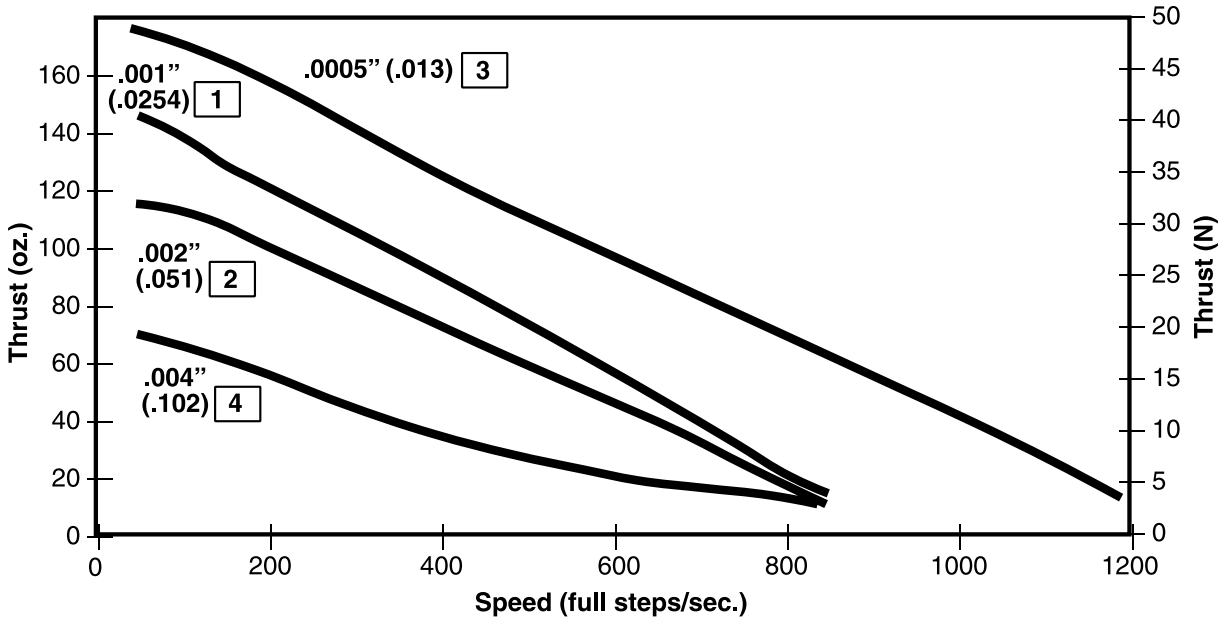

NOTE: All chopper drive curves were created with a 5 Volt motor and a 40 Volt power supply.

Ramping can increase the performance of a motor either by increasing the top speed or getting a heavier load accelerated up to speed faster. Also, deceleration can be used to stop the motor without overshoot.

Exceptional performance at an economical price.

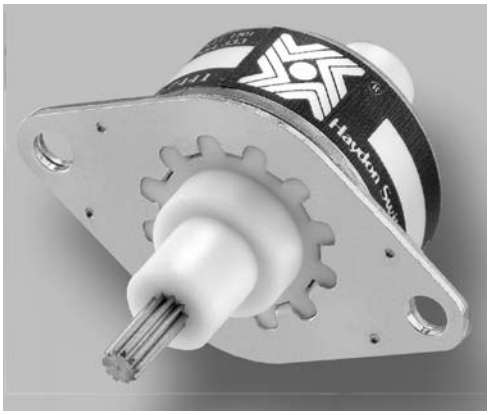

The Z26000 Series motors are ideal for high volume. Utilizing rare earth (neodymium) magnets. Also, available in a special "earless" configuration without a mounting flange.

All units are built with reliable dual ball bearings.

Salient Characteristics

Ø 26 mm (1-in) Z-Series motor					
Wiring		Bipolar			
Part No.	Captive	Z2644X-V		Z2654X-V	
	Non-captive	Z2634X-V		Z2684X-V	
	External**	Z2644X-V**		Z2654X-V**	
Step angle		7.5°		15°	
Winding voltage		5 VDC	12 VDC	5 VDC	12 VDC
Current/phase		340 mA	140 mA	340 mA	140 mA
Resistance/phase		14.7 Ω	84 Ω	14.7 Ω	84 Ω
Inductance/phase		8.5 mH	55 mH	6.7 mH	44 mH
Power consumption		3.4 W			
Rotor inertia		1.4 gcm^2			
Temperature rise		135°F Rise (75°C Rise)			
Weight		1.2 oz (34 g)			
Insulation resistance		20 MΩ			

Ø 26 mm (1-in) Z-Series motor					
Wiring		Unipolar*			
Part No.	Captive	Z2646X-V		Z2656X-V	
	Non-captive	Z2636X-V		Z2686X-V	
	External**	Z2646X-V**		Z2656X-V**	
Step angle		7.5°		15°	
Winding voltage		5 VDC	12 VDC	5 VDC	12 VDC
Current/phase		340 mA	140 mA	340 mA	140 mA
Resistance/phase		14.7 Ω	84 Ω	14.7 Ω	84 Ω
Inductance/phase		4.3 mH	24 mH	3.4 mH	19 mH
Power consumption		3.4 W			
Rotor inertia		1.4 gcm^2			
Temperature rise		135°F Rise (75°C Rise)			
Weight		1.2 oz (34 g)			
Insulation resistance		20 MΩ			

Linear Travel/Step			Order Code I.D.
Step	inches	mm	
7.5° Angle	0.0005	0.013	3
	0.001	0.0254	1
	0.002	0.051	2
15° Angle	0.00164	0.04166	AS
	0.002	0.051	2
	0.004	0.102	4

Special drive considerations may be necessary when leaving shaft fully extended or fully retracted.

* Unipolar drive gives approximately 40% less thrust vs. bipolar drive.

** When ordering Z-Series External Linear motors, add -900 to end of the Part Number.

Captive Leadscrew

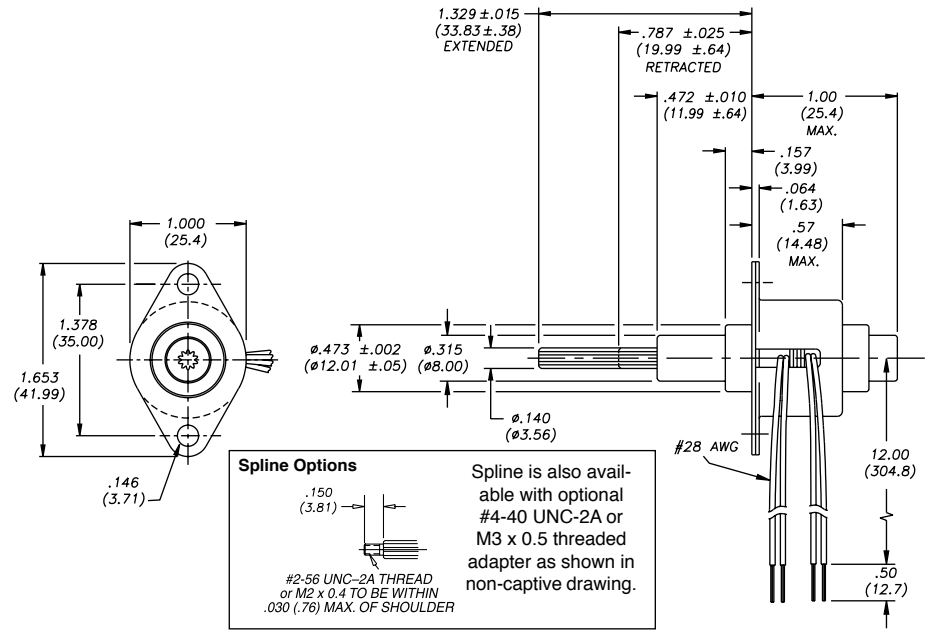

Spline Options

Spline is also available with optional #4-40 UNC-2A or M3 x 0.5 threaded adapter as shown in non-captive drawing.

Non-Captive Leadscrew

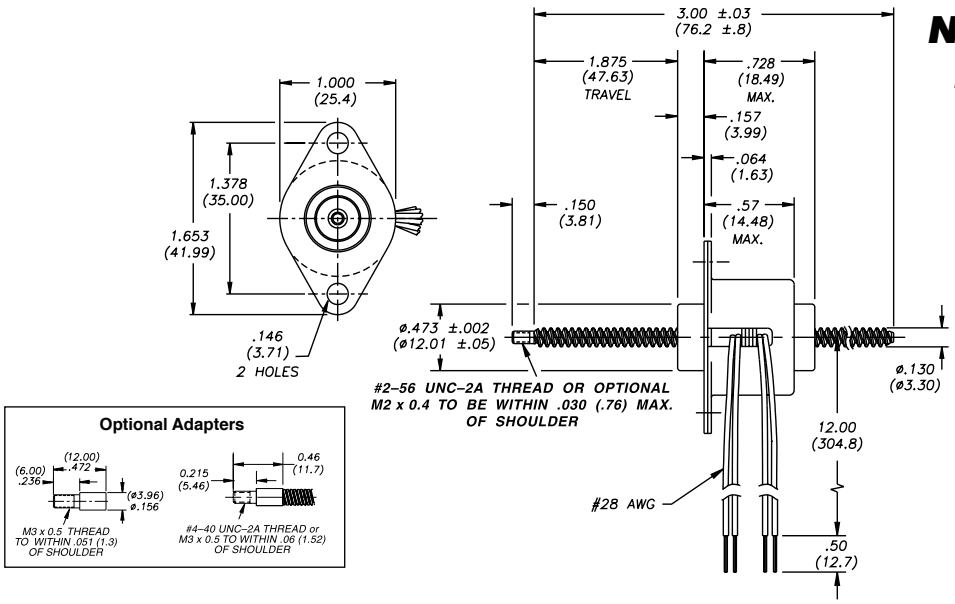

Optional Adapters

External Linear

Linear Series Z26000 Nut Option

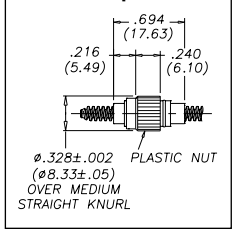

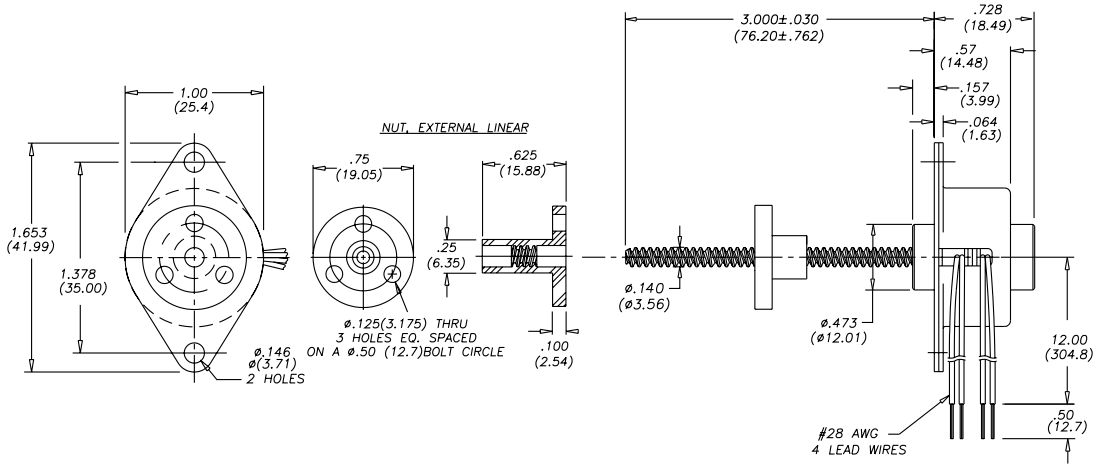

Specially engineered Z26000 (Ø 26 mm, 1-in) linear actuators that extend captive leadscrew travel beyond 12.7 mm (1/2-in).

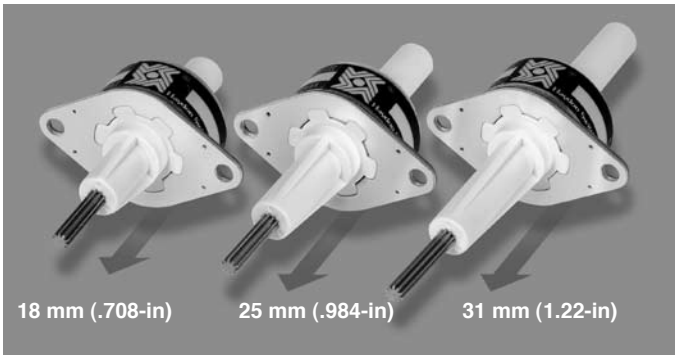

Salient Characteristics

Ø 26 mm (1-in) Z-Series motor					
Wiring		Bipolar			
Part No.	Captive	Z2644X-V		Z2654X-V	
Step angle		7.5°		15°	
Winding voltage		5 VDC	12 VDC	5 VDC	12 VDC
Current/phase		340 mA	140 mA	340 mA	140 mA
Resistance/phase		14.7 Ω	84 Ω	14.7 Ω	84 Ω
Inductance/phase		8.5 mH	55 mH	6.7 mH	44 mH
Power consumption		3.4 W			
Rotor inertia		1.4 gcm^2			
Temperature rise		135°F Rise (75°C Rise)			
Weight		1.2 oz (34 g)			
Insulation resistance		20 MΩ			

Ø 26 mm (1-in) Z-Series motor					
Wiring		Unipolar*			
Part No.	Captive	Z2646X-V		Z2656X-V	
Step angle		7.5°		15°	
Winding voltage		5 VDC	12 VDC	5 VDC	12 VDC
Current/phase		340 mA	140 mA	340 mA	140 mA
Resistance/phase		14.7 Ω	84 Ω	14.7 Ω	84 Ω
Inductance/phase		4.3 mH	24 mH	3.4 mH	19 mH
Power consumption		3.4 W			
Rotor inertia		1.4 gcm^2			
Temperature rise		135°F Rise (75°C Rise)			
Weight		1.2 oz (34 g)			
Insulation resistance		20 MΩ			

Linear Travel/Step			Order Code I.D.
Step	inches	mm	
7.5° Angle	0.0005	0.013	3
	0.001	0.0254	1
	0.002	0.051	2
15° Angle	0.00164	0.04166	AS
	0.002	0.051	2
	0.004	0.102	4

* Unipolar drive gives approximately 40% less thrust vs. bipolar drive.

Captive Leadscrew

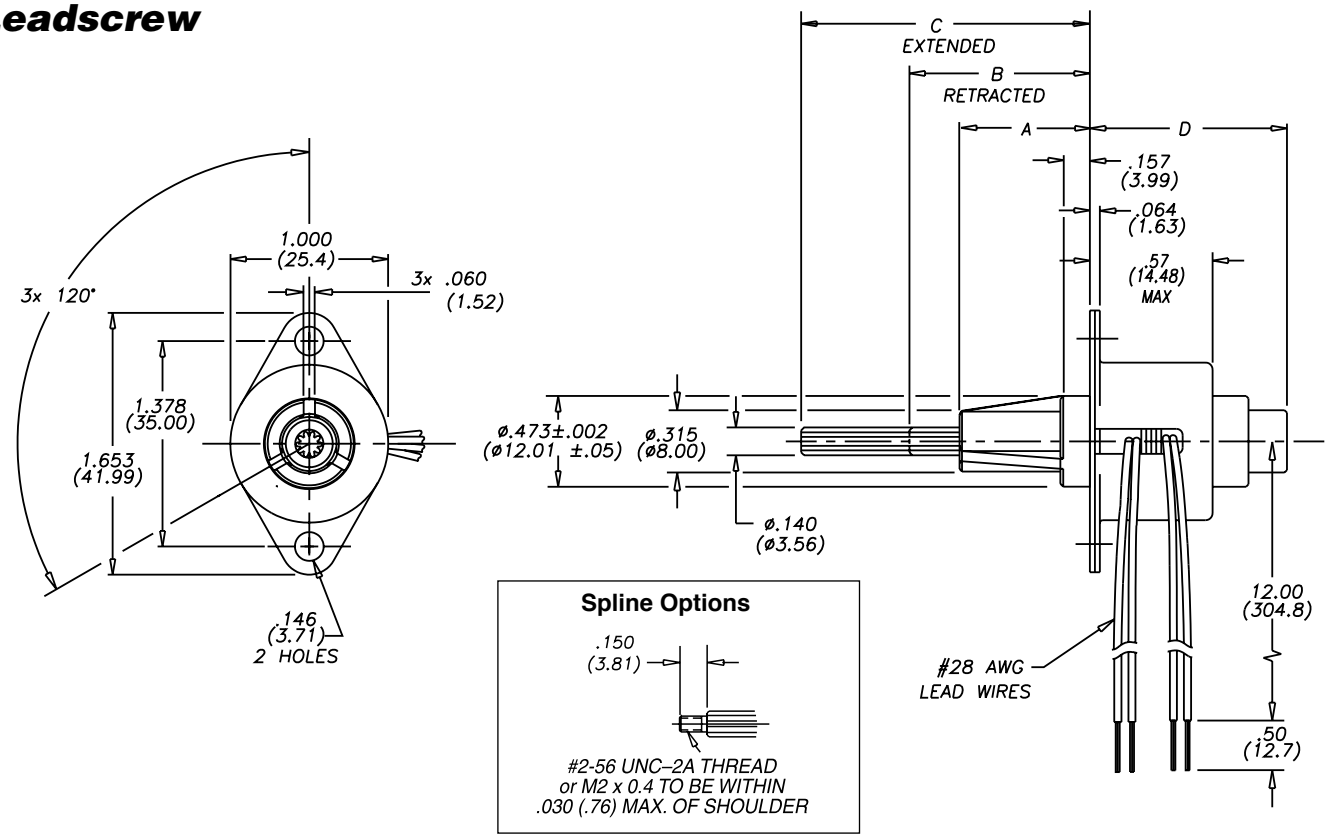

Spline Options

#2-56 UNC–2A THREAD or M2 x 0.4 TO BE WITHIN .030 (.76) MAX. OF SHOULDER

Adapter Option

Spline is also available with optional #4-40 UNC-2A or M3 x 0.5 threaded adapter.

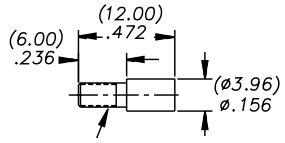

M3 x 0.5 THREAD TO WITHIN .051 (1.3) OF SHOULDER

Stroke (min.)	Front Sleeve A	Retracted B	Extended C	Rear Sleeve D	Suffix Code
.708 (18 mm)	.679±.010 (17.25±.25)	.994±.025 (25.25±.64)	1.743±.015 (44.27±.38)	1.21 max. (30.7 max.)	– 918
.984 (25 mm)	.955±.010 (24.26±.25)	1.269±.025 (32.23±.64)	2.293±.015 (58.24±.38)	1.48 max. (37.6 max.)	– 925
1.22 (31 mm)	1.191±.010 (30.25±.25)	1.505±.025 (38.23±.64)	2.765±.015 (70.23±.38)	1.72 max. (43.7 max.)	– 931

THRUST vs. FULL STEPS/SECOND

L/R Drive • Bipolar • 100% Duty Cycle

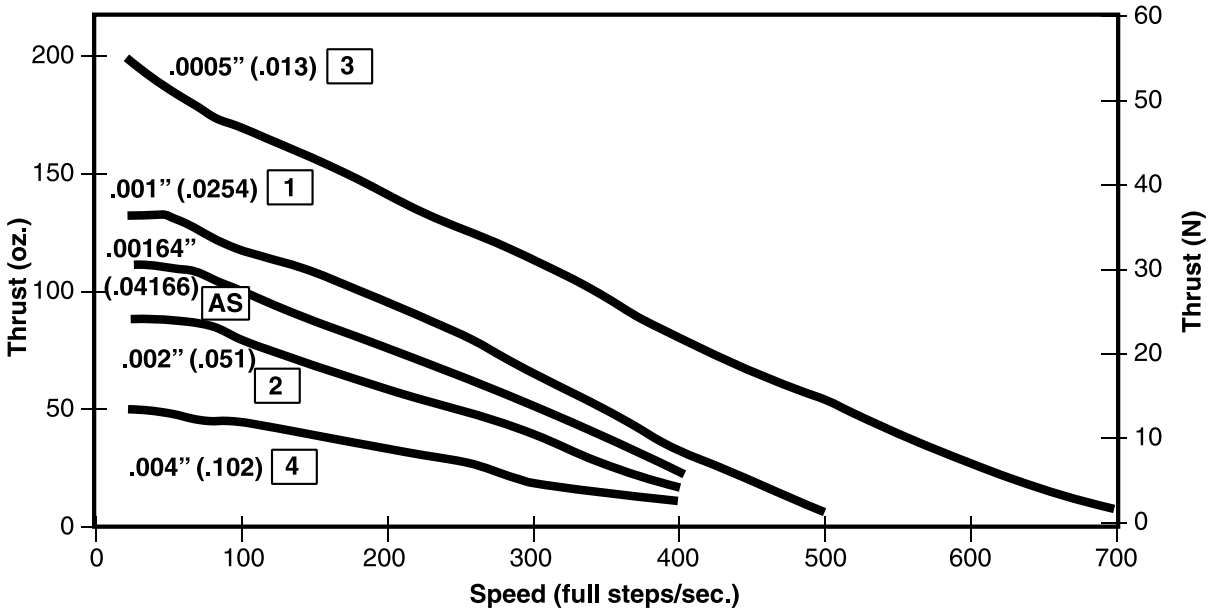

THRUST vs. FULL STEPS/SECOND

L/R Drive • Bipolar • 25% Duty Cycle

25% duty cycle is obtained by a special winding or by running a standard motor at double the rated voltage.

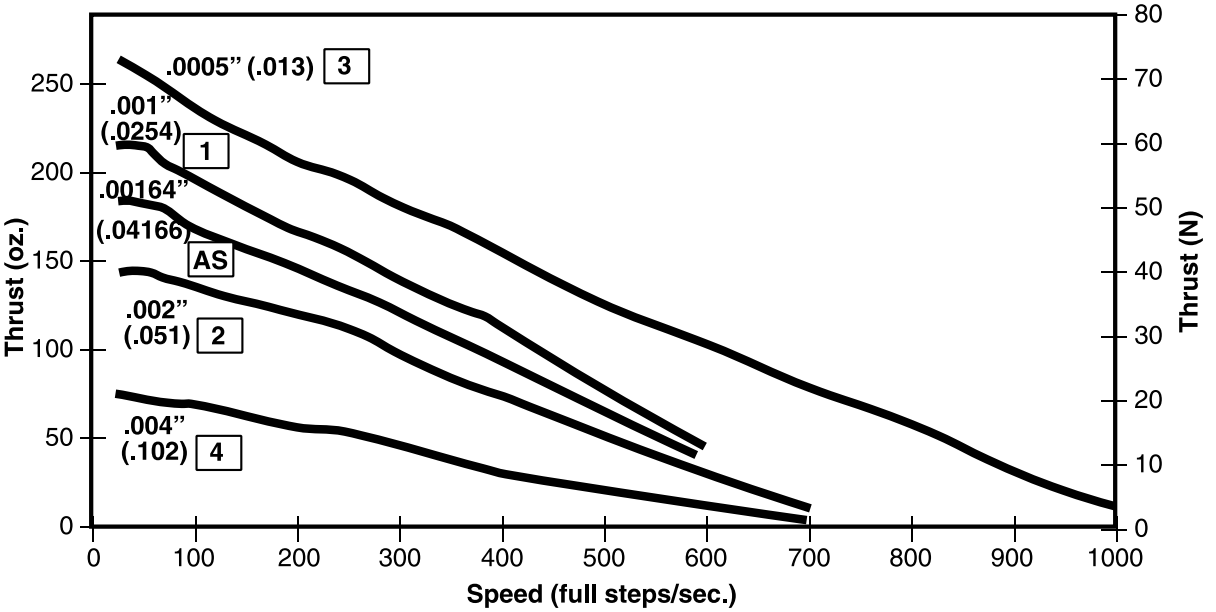

NOTE: Ramping can increase the performance of a motor either by increasing the top speed or getting a heavier load accelerated up to speed faster. Also, deceleration can be used to stop the motor without overshoot.

THRUST vs. FULL STEPS/SECOND

Chopper Drive • Bipolar • 100% Duty Cycle

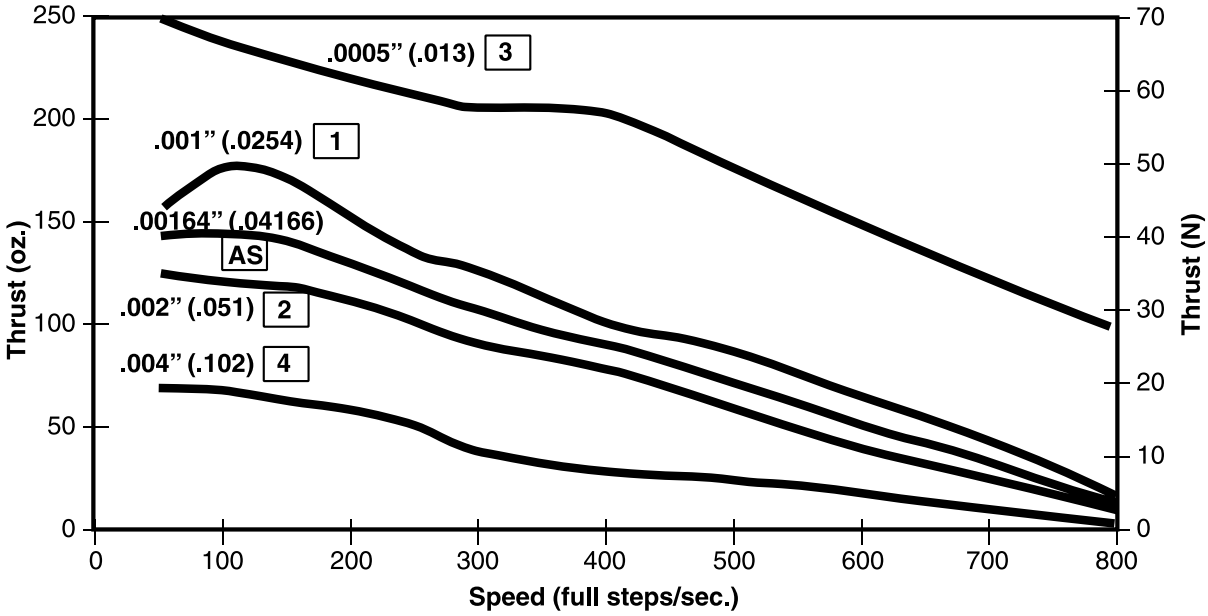

THRUST vs. FULL STEPS/SECOND

Chopper Drive • Bipolar • 25% Duty Cycle

25% duty cycle is obtained by a special winding or by running a standard motor at double the rated voltage.

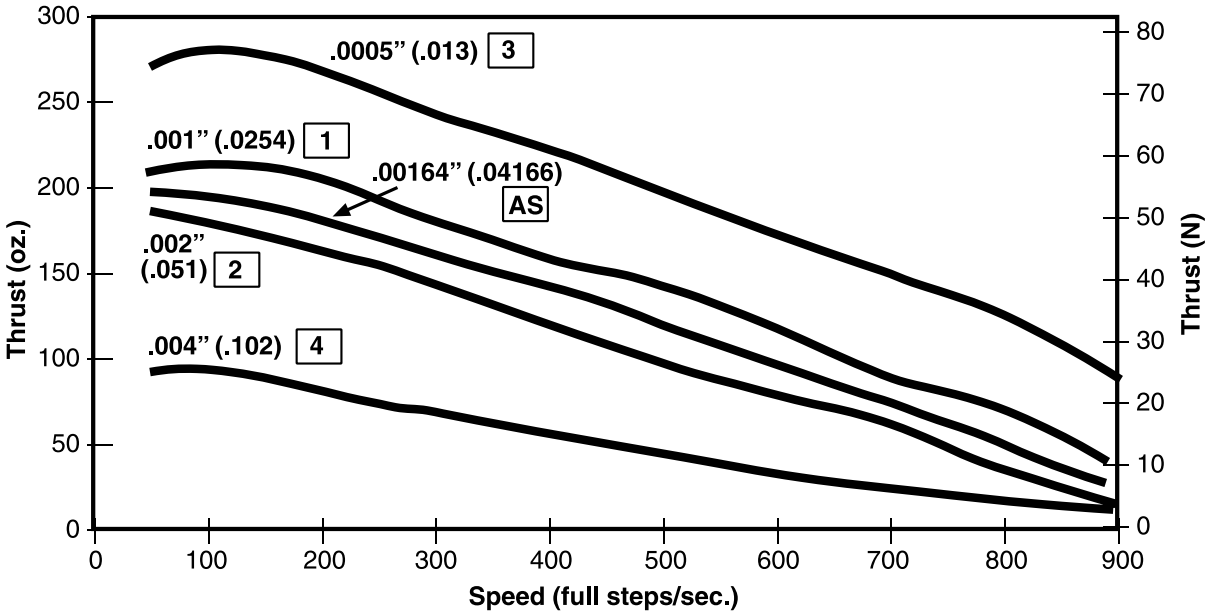

NOTE: All chopper drive curves were created with a 5 Volt motor and a 40 Volt power supply.

Ramping can increase the performance of a motor either by increasing the top speed or getting a heavier load accelerated up to speed faster. Also, deceleration can be used to stop the motor without overshoot.

High resolution steppers for applications requiring fine step increments down to 0.00025-in (0.0064 mm).

The Haydon™ High Resolution 26000 Series features the smallest capability in a permanent magnet linear actuator. Motors can also be electronically micro-stepped.

Salient Characteristics

Ø 26 mm (1-in) High Resolution Motor					
Wiring		Bipolar		Unipolar*	
Part No.	Captive	26449-V		26469-V	
	Non-captive	26349-V		26369-V	
	External	E26449-V		E26469-V	
Step angle		7.5°			
Winding voltage		5 VDC	12 VDC	5 VDC	12 VDC
Current/phase		340 mA	140 mA	340 mA	140 mA
Resistance/phase		14.7 Ω	84 Ω	14.7 Ω	84 Ω
Inductance/phase		8.5 mH	55 mH	4.3 mH	24 mH
Power consumption		3.4 W			
Rotor inertia		1.2 gcm^2			
Temperature rise		135°F Rise (75°C Rise)			
Weight		1.2 oz (35 g)			
Insulation resistance		20 MΩ			

* Unipolar drive gives approximately 30% less thrust vs. bipolar drive.

Linear Travel/Step: Bipolar & Unipolar			Order Code I.D.
Step	inches	mm	
7.5° Angle	0.00025	0.00643	9

Special drive considerations may be necessary when leaving shaft fully extended or fully retracted.

Captive Leadscrew

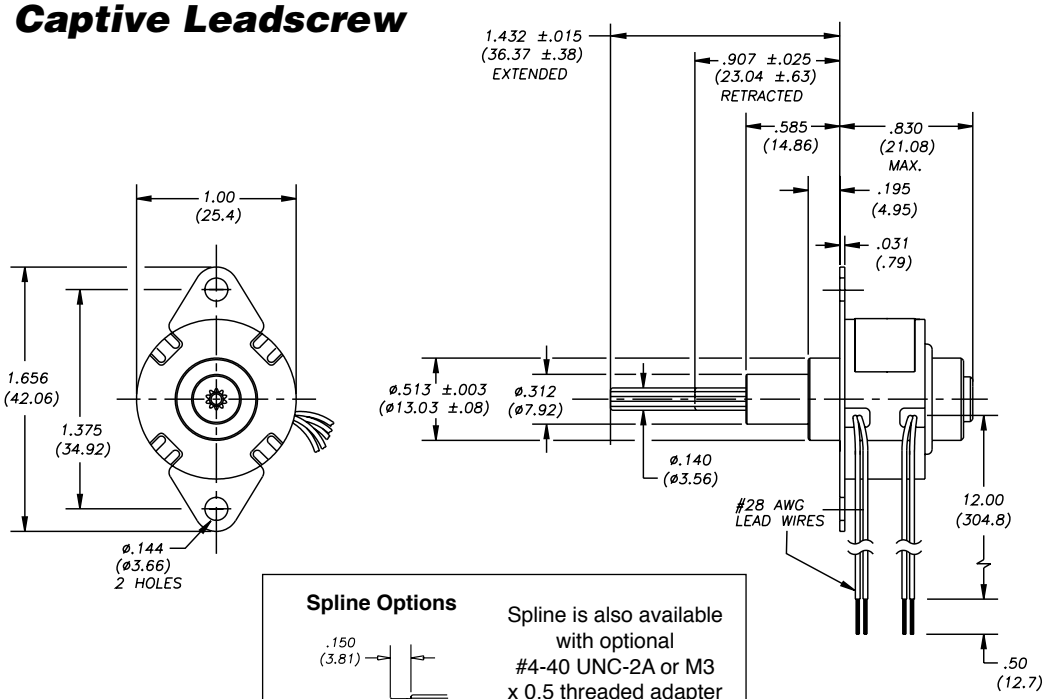

Spline Options

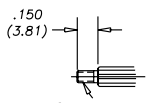

Spline is also available with optional #4-40 UNC-2A or M3 x 0.5 threaded adapter as shown in non-captive drawing.

Non-Captive Leadscrew

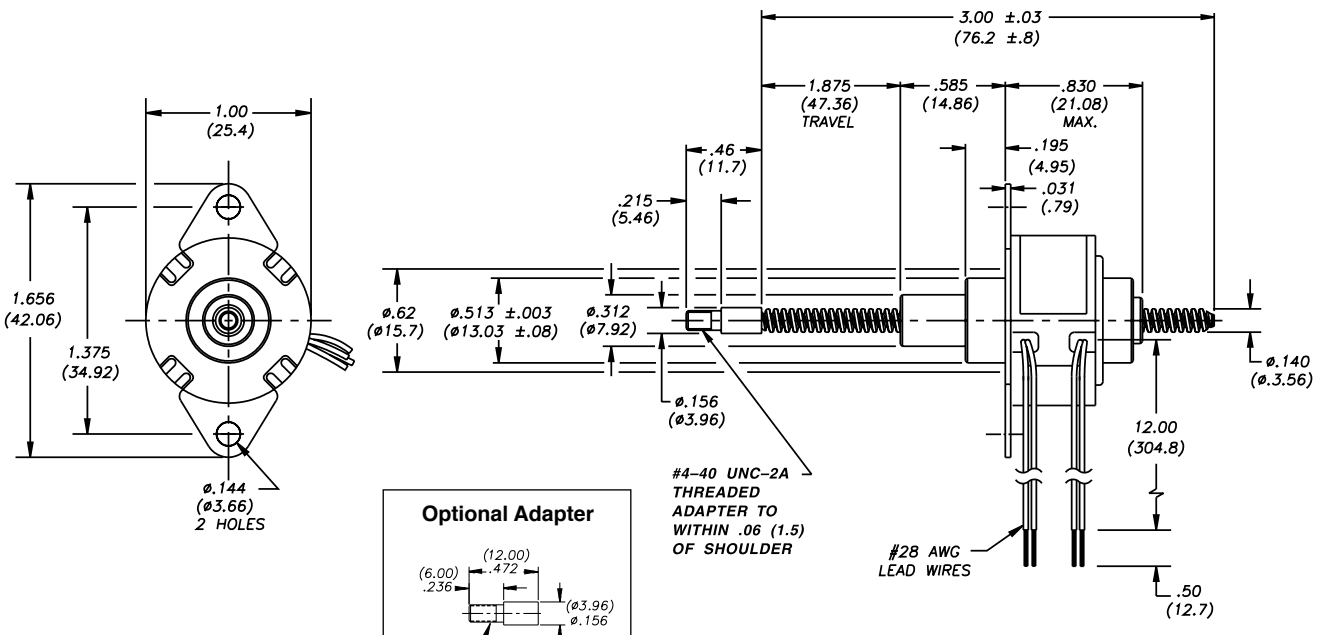

Optional Adapter

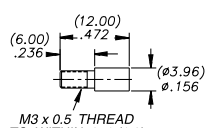

External Linear

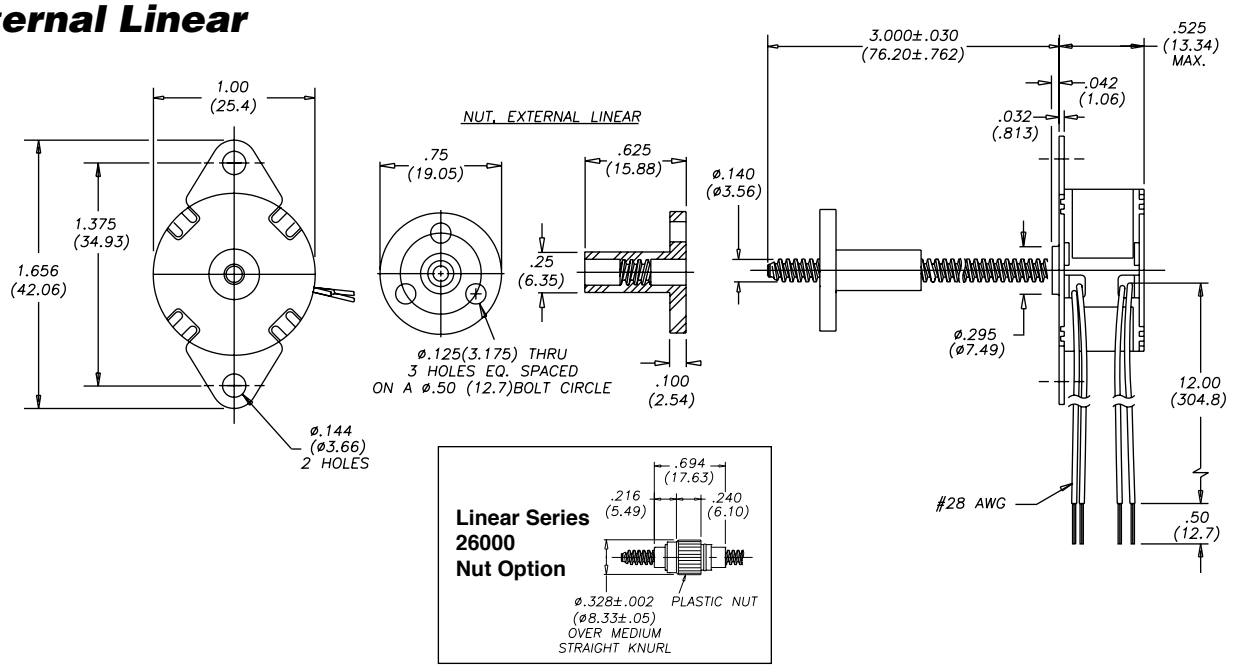

26000 Series: Can-Stack High Resolution Performance Curve

THRUST vs. FULL STEPS/SECOND

L/R Drive • Bipolar • 100% Duty Cycle

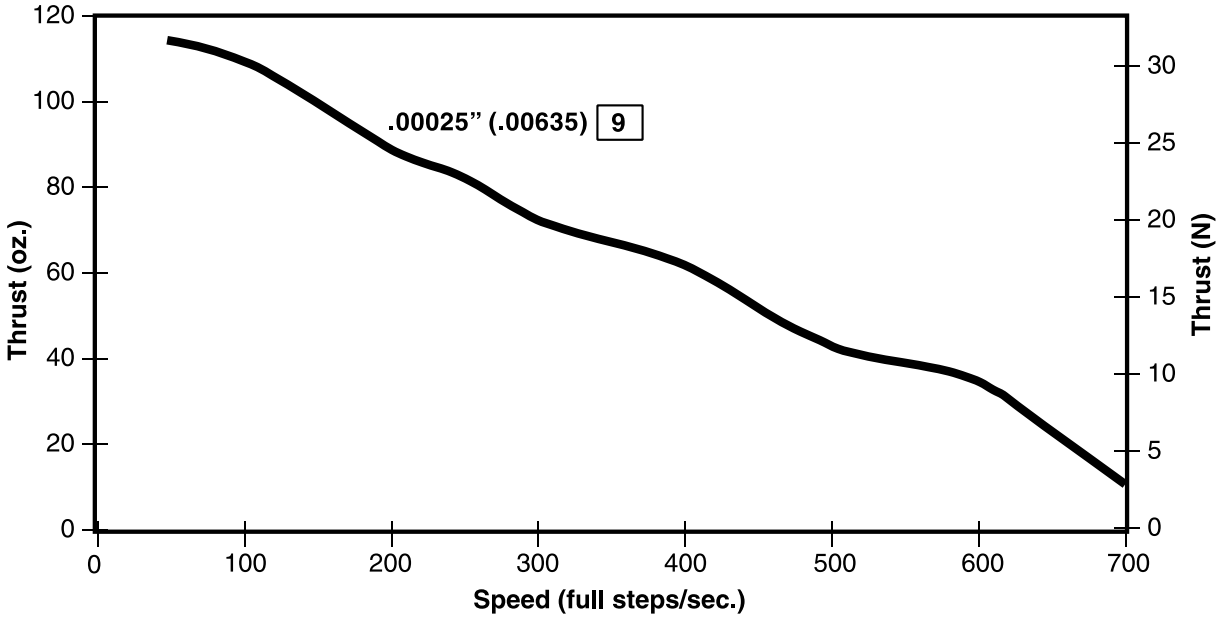

NOTE: Ramping can increase the performance of a motor either by increasing the top speed or getting a heavier load accelerated up to speed faster. Also, deceleration can be used to stop the motor without overshoot.

Higher thrust... more versatility and greater durability.

Salient Characteristics

Ø 36 mm (1.4-in) motor					
Wiring		Bipolar			
Part No.	Captive	3644X-V		3654X-V	
	Non-captive	3634X-V		3684X-V	
	External	E3644X-V		E3654X-V	
Step angle		7.5°		15°	
Winding voltage		5 VDC	12 VDC	5 VDC	12 VDC
Current/phase		460 mA	190 mA	460 mA	190 mA
Resistance/phase		11 Ω	63 Ω	11 Ω	63 Ω
Inductance/phase		7.2 mH	45 mH	5.5 mH	35 mH
Power consumption		4.6 W			
Rotor inertia		10.5 gcm^2			
Temperature rise		135°F Rise (75°C Rise)			
Weight		3 oz (86 g)			
Insulation resistance		20 MΩ			

Ø 36 mm (1.4-in) motor					
Wiring		Unipolar*			
Part No.	Captive	3646X-V		3656X-V	
	Non-captive	3636X-V		3686X-V	
	External	E3646X-V		E3656X-V	
Step angle		7.5°		15°	
Winding voltage		5 VDC	12 VDC	5 VDC	12 VDC
Current/phase		460 mA	190 mA	460 mA	190 mA
Resistance/phase		11 Ω	63 Ω	11 Ω	63 Ω
Inductance/phase		3.8 mH	19 mH	3 mH	15 mH
Power consumption		4.6 W			
Rotor inertia		10.5 gcm^2			
Temperature rise		135°F Rise (75°C Rise)			
Weight		3 oz (86 g)			
Insulation resistance		20 MΩ			

* Unipolar drive gives approximately 30% less thrust vs. bipolar drive.

Other styles available...

- High Resolution Series
- Teflon® lead-screw
- High Temperature Option

Linear Travel/Step			Order Code I.D.
Step	inches	mm	
7.5° Angle	0.0005	0.013	3
	0.001	0.0254	1
	0.002	0.051	2
15° Angle	0.002	0.051	2
	0.004	0.102	4

Captive Leadscrew

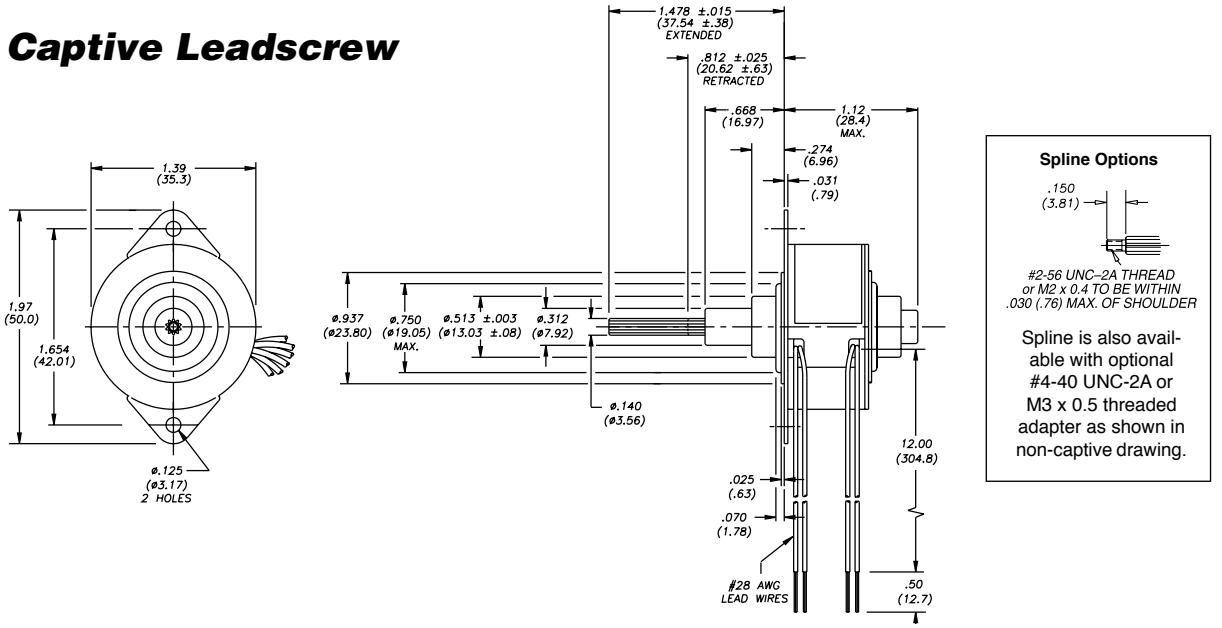

Spline Options

#2-56 UNC–2A THREAD or M2 x 0.4 TO BE WITHIN .030 (.76) MAX. OF SHOULDER

Spline is also available with optional #4-40 UNC-2A or M3 x 0.5 threaded adapter as shown in non-captive drawing.

Non-Captive Leadscrew

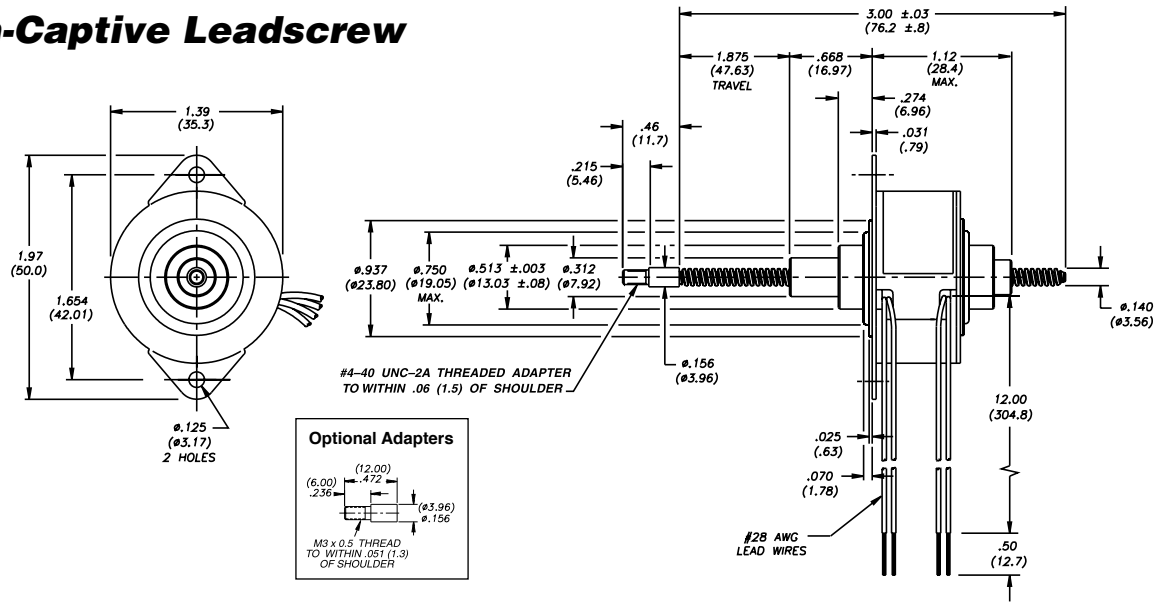

Optional Adapters

External Linear

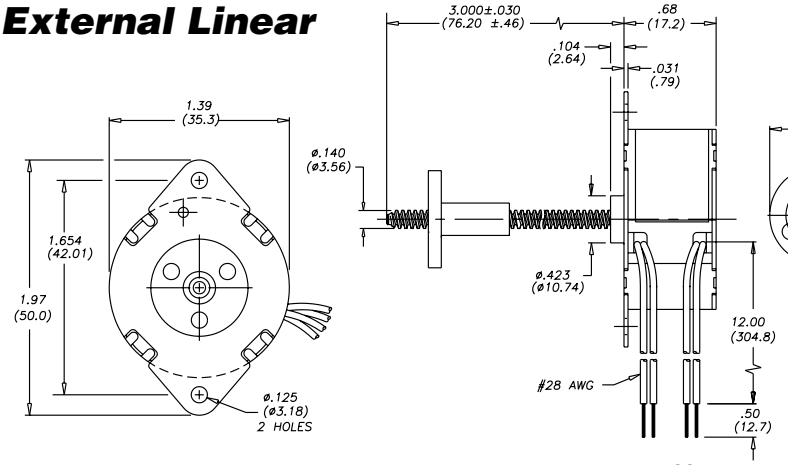

Linear Series 36000 Nut Option

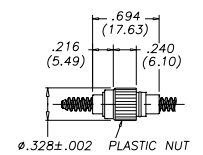

THRUST vs. FULL STEPS/SECOND

L/R Drive • Bipolar • 100% Duty Cycle

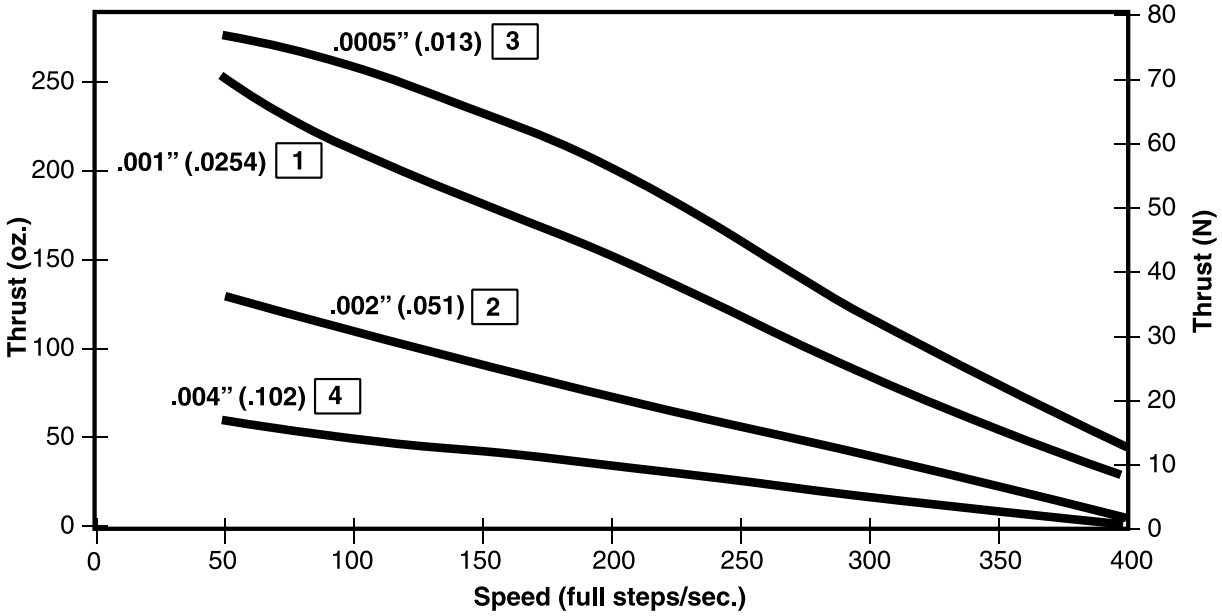

THRUST vs. FULL STEPS/SECOND

L/R Drive • Bipolar • 25% Duty Cycle

25% duty cycle is obtained by a special winding or by running a standard motor at double the rated voltage.

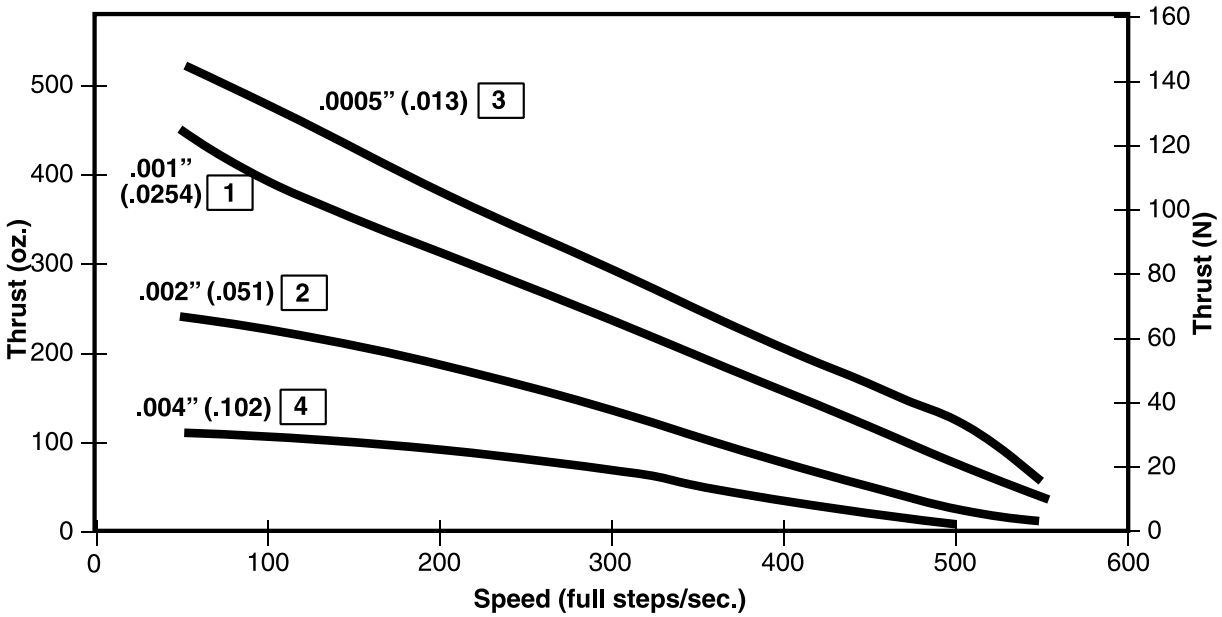

NOTE: Ramping can increase the performance of a motor either by increasing the top speed or getting a heavier load accelerated up to speed faster. Also, deceleration can be used to stop the motor without overshoot.

THRUST vs. FULL STEPS/SECOND

Chopper Drive • Bipolar • 100% Duty Cycle

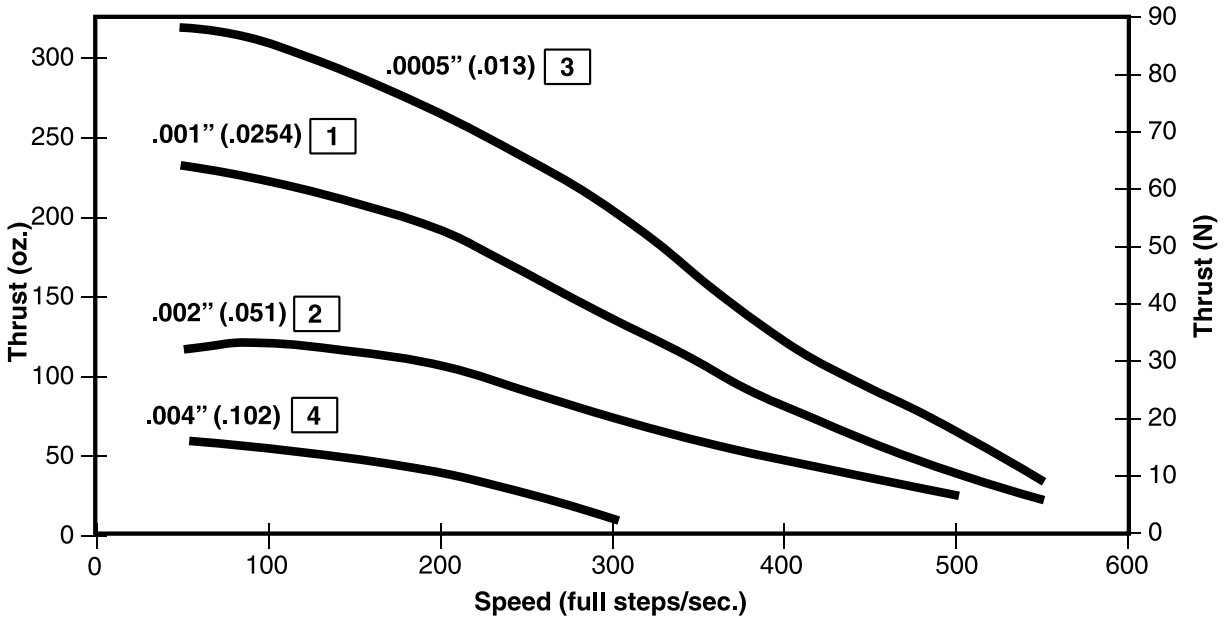

THRUST vs. FULL STEPS/SECOND

Chopper Drive • Bipolar • 25% Duty Cycle

25% duty cycle is obtained by a special winding or by running a standard motor at double the rated current.

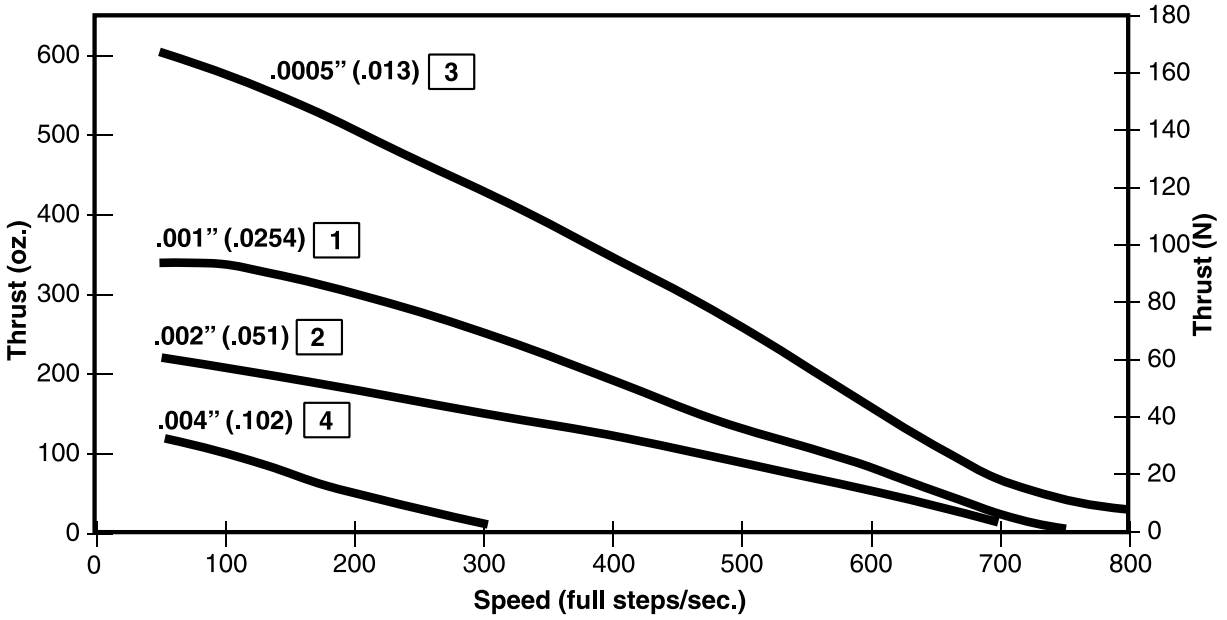

NOTE: All chopper drive curves were created with a 5 Volt motor and a 40 Volt power supply.

Ramping can increase the performance of a motor either by increasing the top speed or getting a heavier load accelerated up to speed faster. Also, deceleration can be used to stop the motor without overshoot.

Precise linear motion control down to 0.000125-in (0.0032 mm)

The Haydon™ High Resolution 36000 Series features a choice of two extremely small step increments, 0.000125-in (0.0032 mm) and 0.00025-in (0.0064 mm). Motors can also be electronically micro-stepped.

Salient Characteristics

Ø 36 mm (1.4") High Resolution Motor					
Wiring		Bipolar		Unipolar*	
Part No.	Captive	3624X-V		3626X-V	
	Non-captive	3614X-V		3616X-V	
	External	E3624X-V		3626X-V	
Step angle		3.75°			
Winding voltage		5 VDC	12 VDC	5 VDC	12 VDC
Current/phase		460 mA	190 mA	460 mA	190 mA
Resistance/phase		11 Ω	63 Ω	11 Ω	63 Ω
Inductance/phase		9.2 mH	53 mH	4.6 mH	26 mH
Power consumption		4.6 W			
Rotor inertia		10.5 gcm^2			
Temperature rise		135°F Rise (75°C Rise)			
Weight		3 oz (86 g)			
Insulation resistance		20 MΩ			

* Unipolar drive gives approximately 30% less thrust vs. bipolar drive.

Linear Travel/Step: Bipolar & Unipolar			Order Code I.D.
Step	inches	mm	
3.75° Angle	0.000125	0.0032	7
	0.00025	0.0064	9

Captive Leadscrew

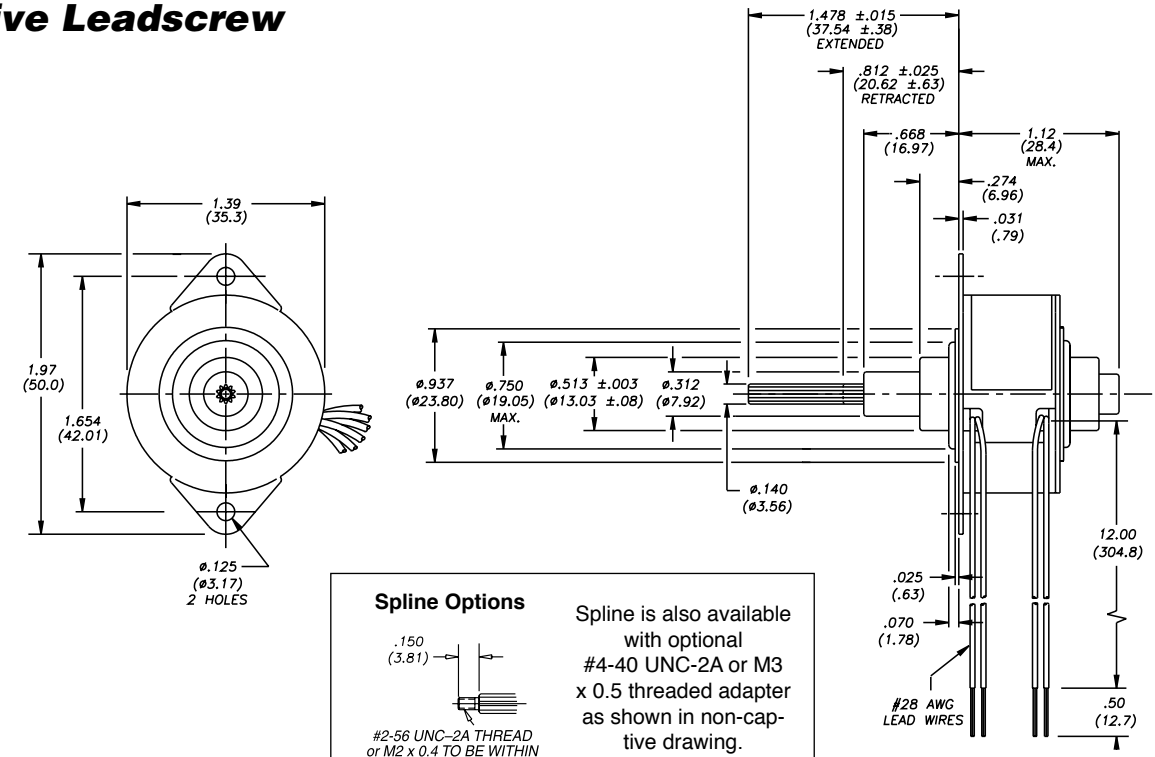

Spline Options

#2-56 UNC–2A THREAD
or M2 x 0.4 TO BE WITHIN
.030 (.76) MAX. OF SHOULDER

Spline is also available with optional #4-40 UNC-2A or M3 x 0.5 threaded adapter as shown in non-captive drawing.

Non-Captive Leadscrew

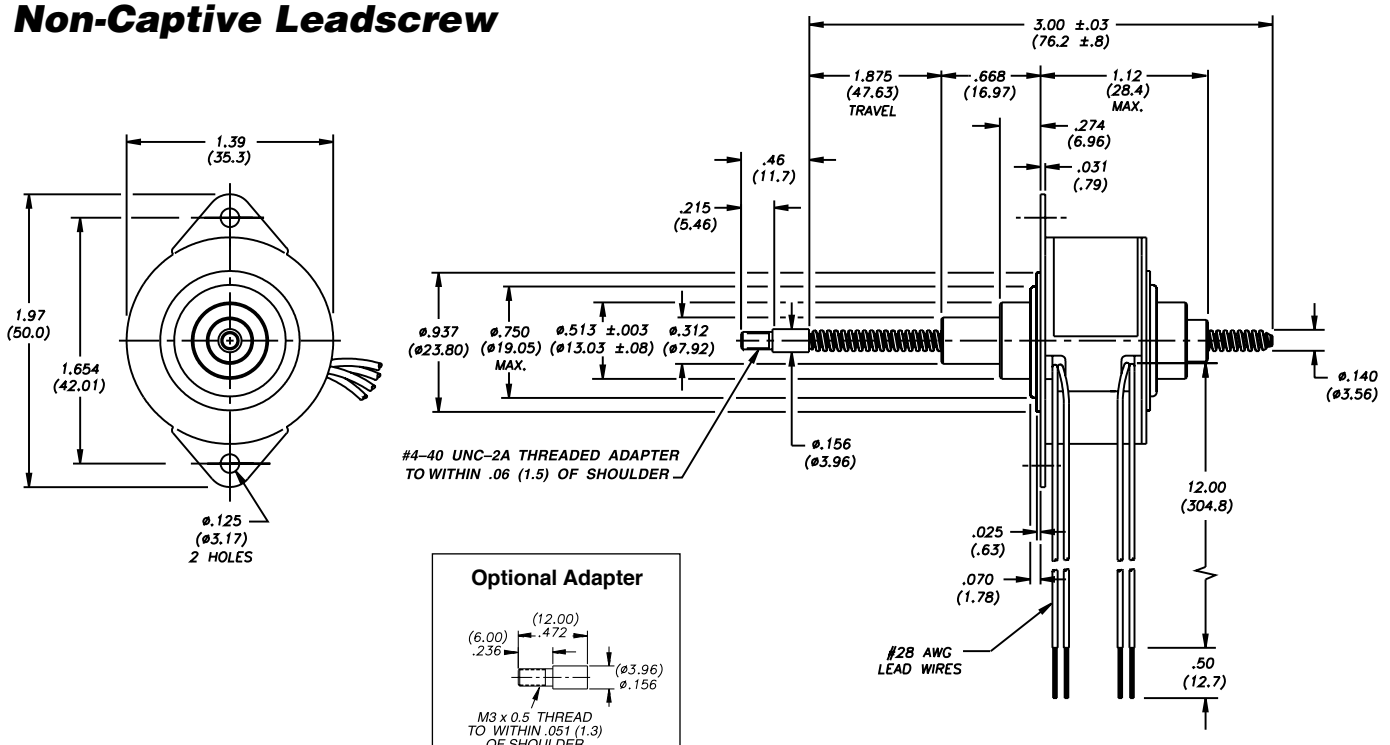

Optional Adapter

M3 x 0.5 THREAD
TO WITHIN .051 (1.3)
OF SHOULDER

External Linear

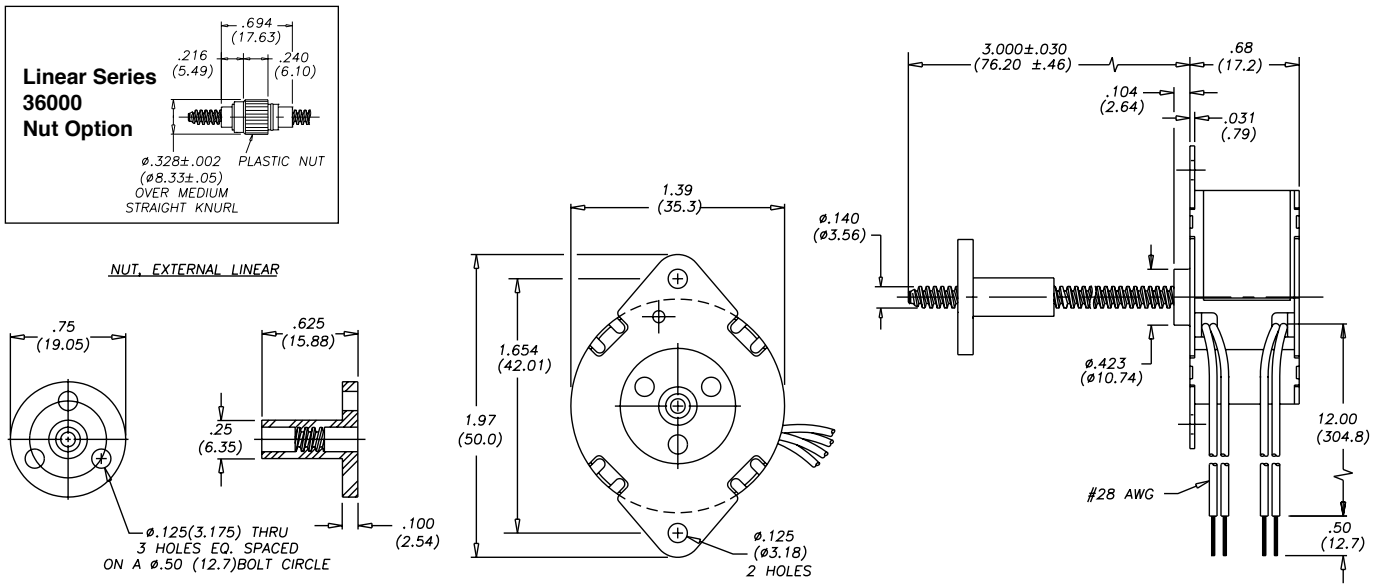

36000 Series: Can-Stack High Resolution Performance Curves

THRUST vs. FULL STEPS/SECOND

L/R Drive • Bipolar • 100% Duty Cycle

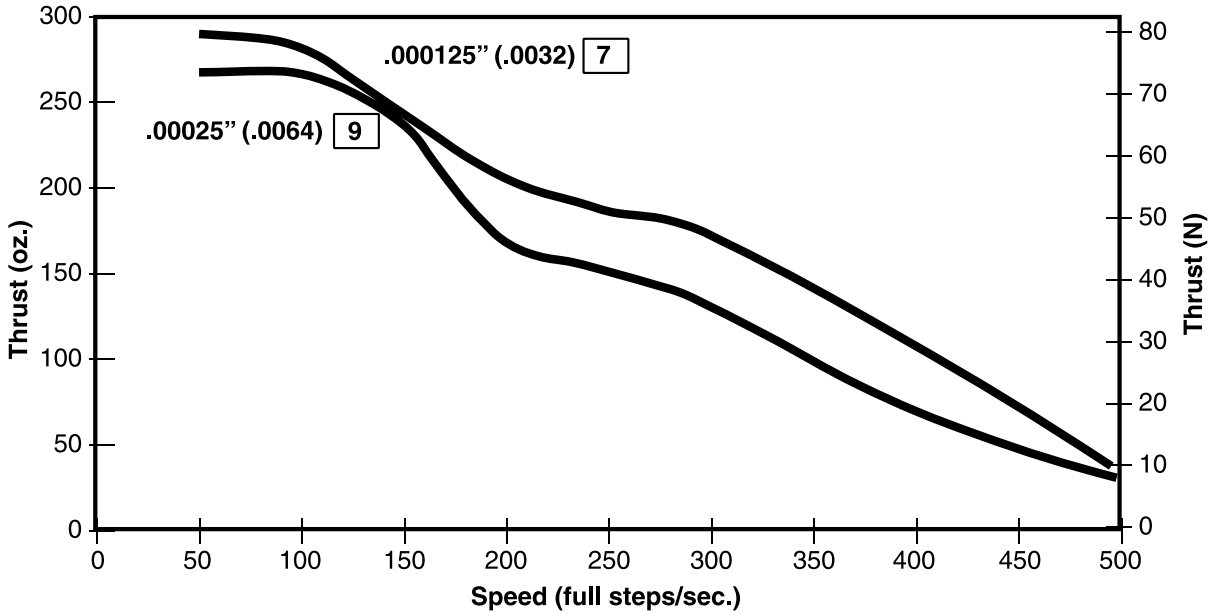

NOTE: Ramping can increase the performance of a motor either by increasing the top speed or getting a heavier load accelerated up to speed faster. Also, deceleration can be used to stop the motor without overshoot.

Heavy-duty... power, versatility, size and long-lasting durability.

Other styles available...

- Teflon® lead-screw
- High Temperature Option

Salient Characteristics

Ø 46 mm (1.8-in) motor					
Wiring		Bipolar			
Part No.	Captive	4644X-V		4654X-V	
	Non-captive	4634X-V		4684X-V	
	External	E4644X-V		E4654X-V	
Step angle		7.5°		15°	
Winding voltage		5 VDC	12 VDC	5 VDC	12 VDC
Current/phase		1.0 A	.41 A	1.0 A	.41 A
Resistance/phase		5 Ω	29 Ω	5 Ω	29 Ω
Inductance/phase		9 mH	52 mH	7.1 mH	39 mH
Power consumption		10 W			
Rotor inertia		25.0 gcm²			
Temperature rise		135°F Rise (75°C Rise)			
Weight		9.0 oz (255 g)			
Insulation resistance		20 MΩ			

Ø 46 mm (1.8-in) motor					
Wiring		Unipolar*			
Part No.	Captive	4646X-V		4656X-V	
	Non-captive	4636X-V		4686X-V	
	External	E4646X-V		E4656X-V	
Step angle		7.5°		15°	
Winding voltage		5 VDC	12 VDC	5 VDC	12 VDC
Current/phase		1.0 A	.41 A	1.0 A	.41 A
Resistance/phase		5 Ω	29 Ω	5 Ω	29 Ω
Inductance/phase		4.5 mH	26 mH	3.5 mH	20 mH
Power consumption		10 W			
Rotor inertia		25.0 gcm²			
Temperature rise		135°F Rise (75°C Rise)			
Weight		9.0 oz (255 g)			
Insulation resistance		20 MΩ			

* Unipolar drive gives approximately 30% less thrust than bipolar drive.

Linear Travel/Step			Order Code I.D.
Step	inches	mm	
7.5° Angle	0.0005	0.013	3
	0.001	0.0254	1
	0.002	0.051	2
	0.004	0.102	4
	0.008	0.203	8
15° Angle	0.004	0.102	4
	0.008	0.203	8
	0.016	0.406	G

Captive Leadscrew

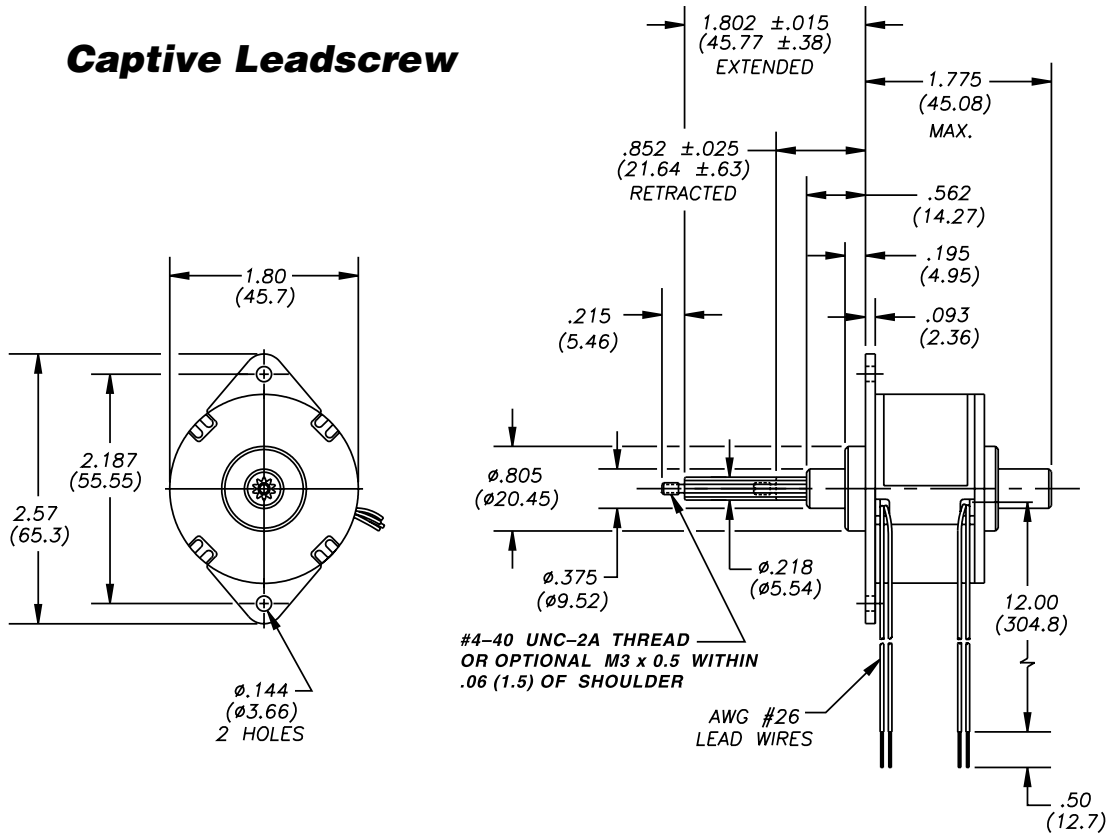

Non-Captive Leadscrew

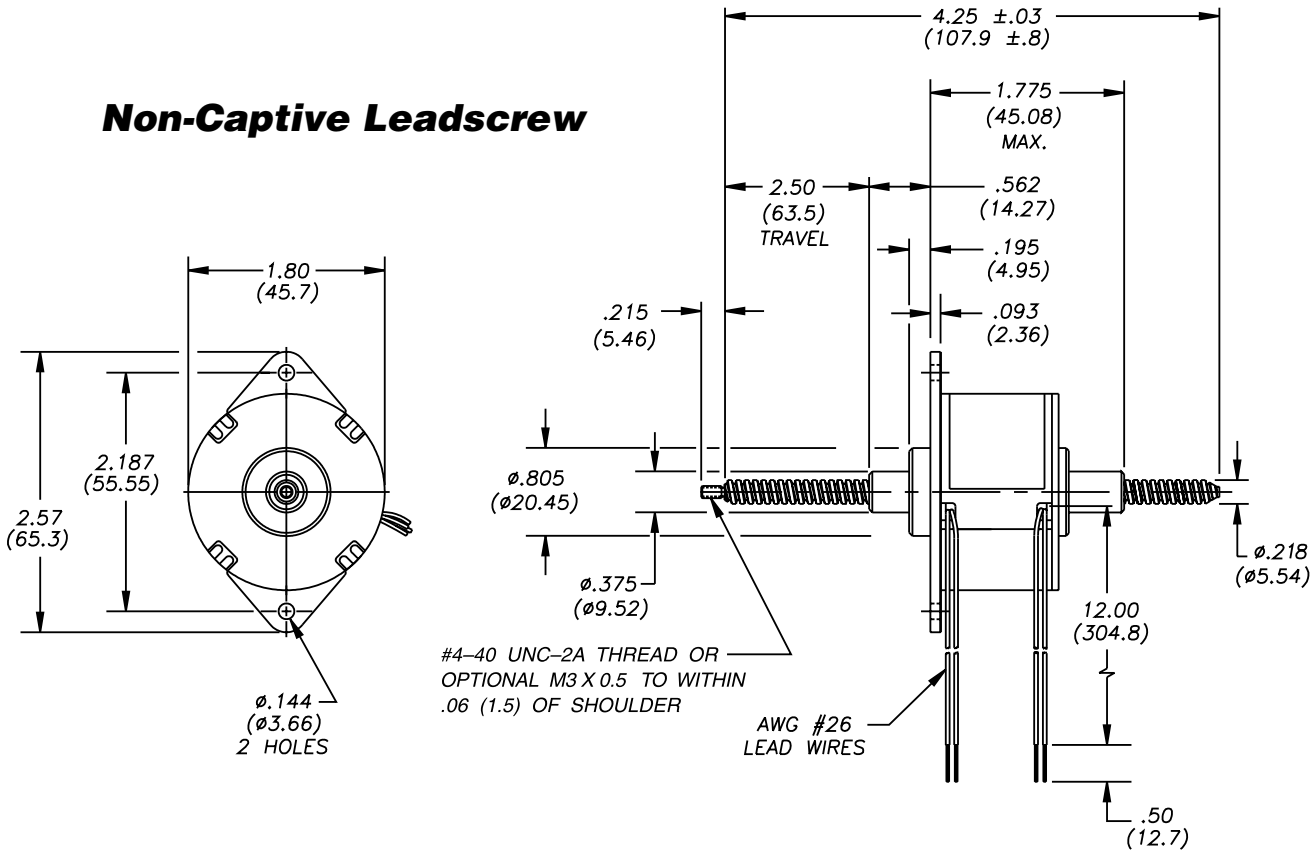

External Linear

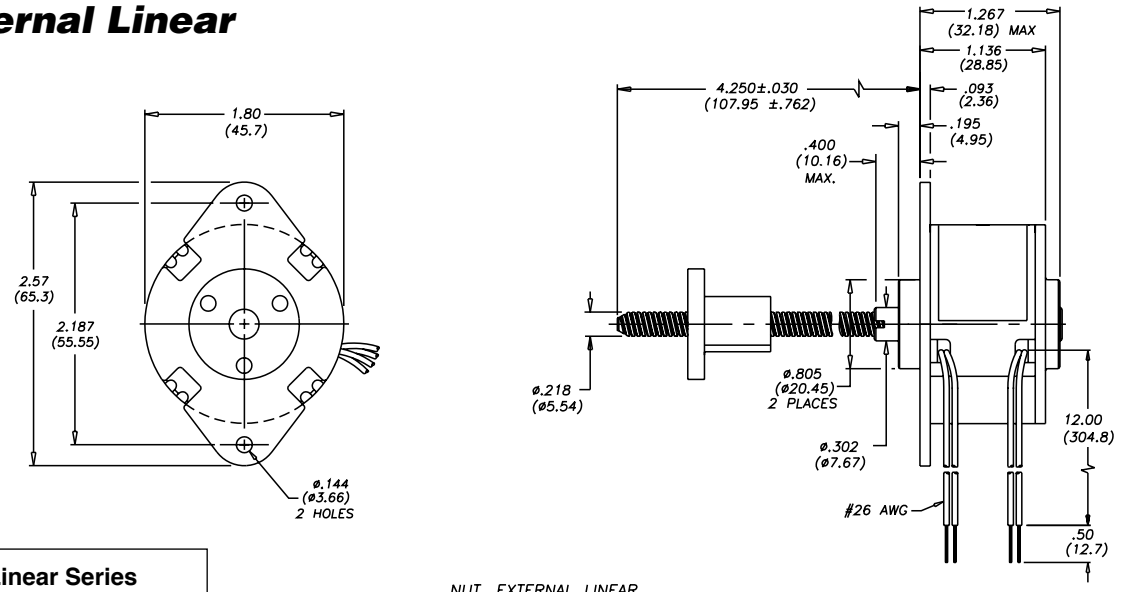

Linear Series 46000 Nut Option

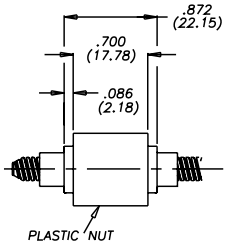

NUT, EXTERNAL LINEAR

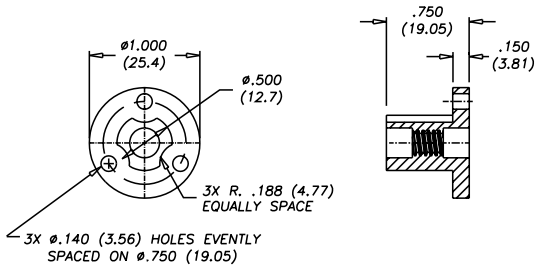

Optional NEMA Flange for Series 46000

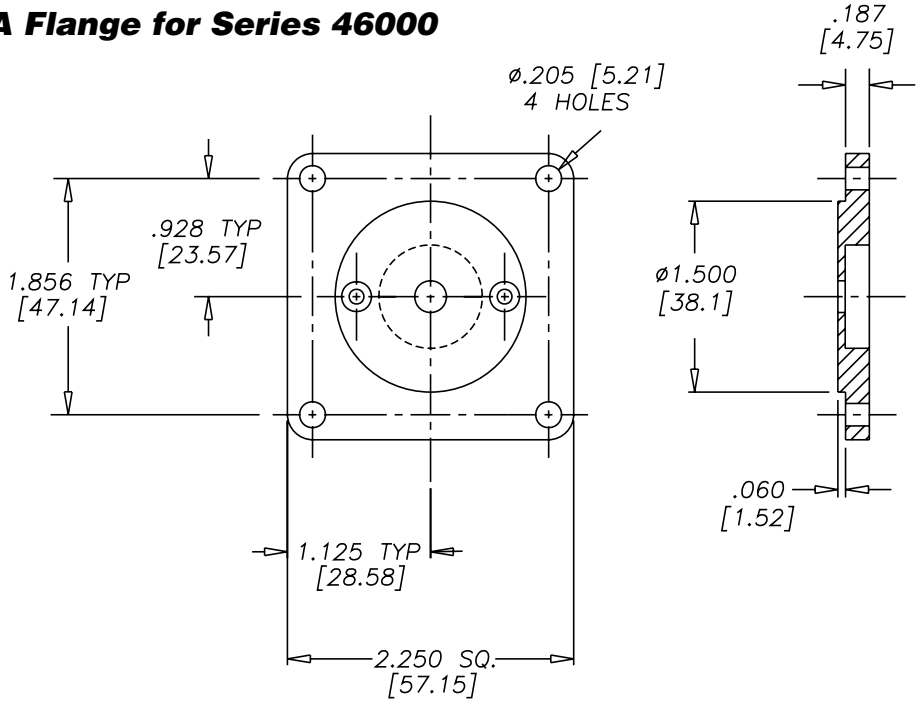

THRUST vs. FULL STEPS/SECOND

L/R Drive • Bipolar • 100% Duty Cycle

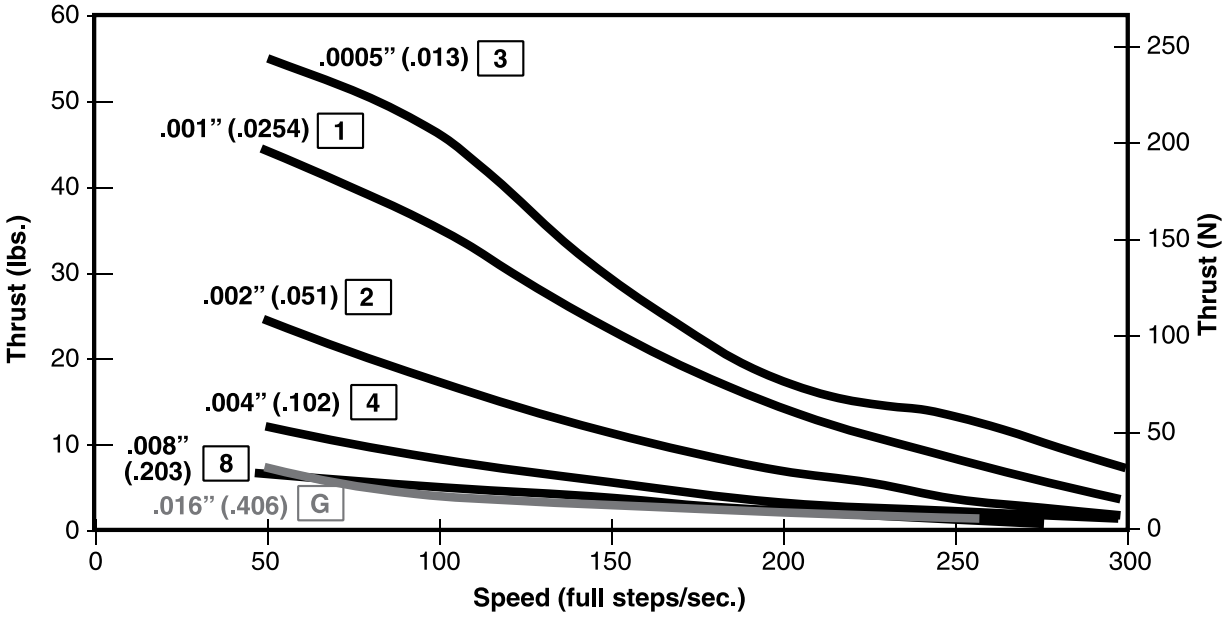

THRUST vs. FULL STEPS/SECOND

L/R Drive • Bipolar • 25% Duty Cycle

25% duty cycle is obtained by a special winding or by running a standard motor at double the rated voltage.

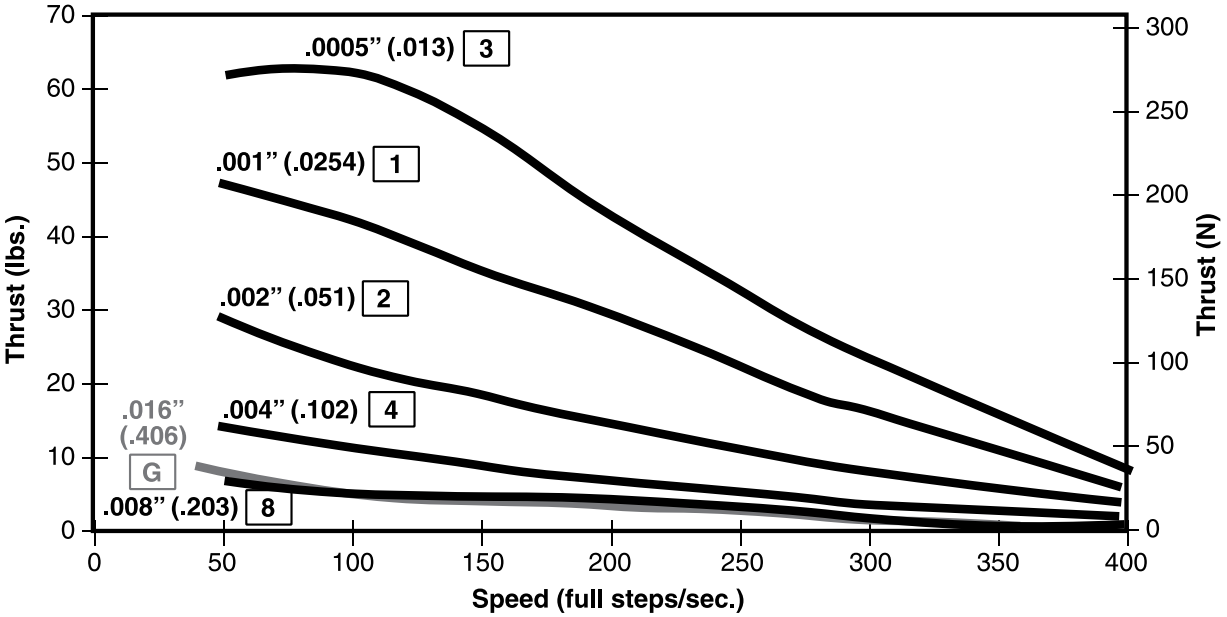

NOTE: Ramping can increase the performance of a motor either by increasing the top speed or getting a heavier load accelerated up to speed faster. Also, deceleration can be used to stop the motor without overshoot.

THRUST vs. FULL STEPS/SECOND

Chopper Drive • Bipolar • 100% Duty Cycle

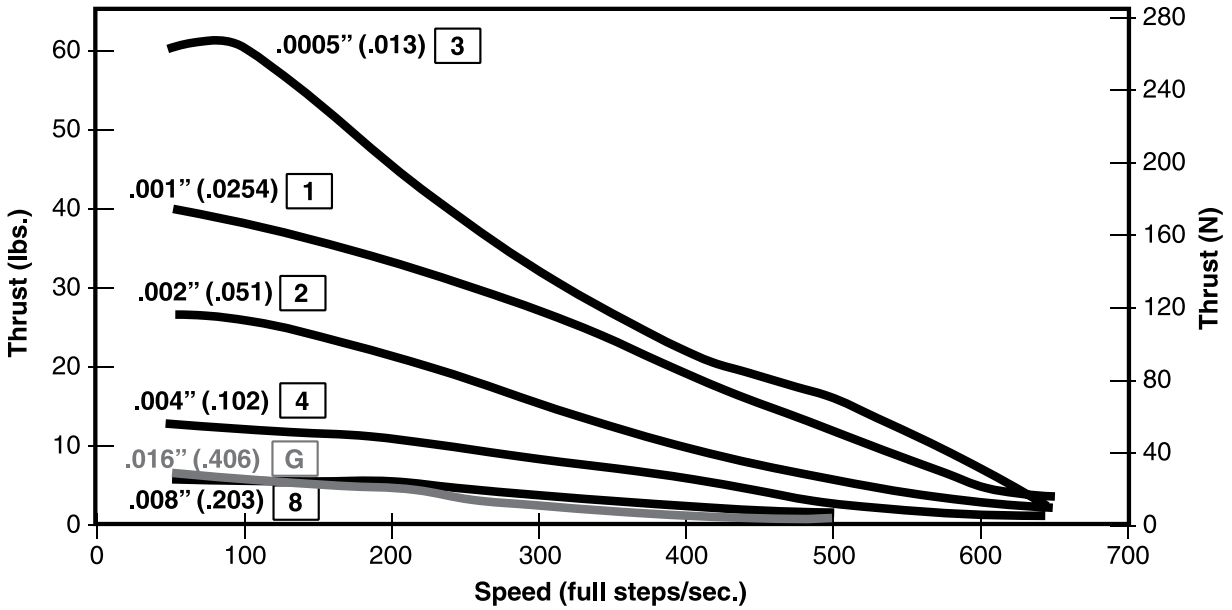

THRUST vs. FULL STEPS/SECOND

Chopper Drive • Bipolar • 25% Duty Cycle

25% duty cycle is obtained by a special winding or by running a standard motor at double the rated current.

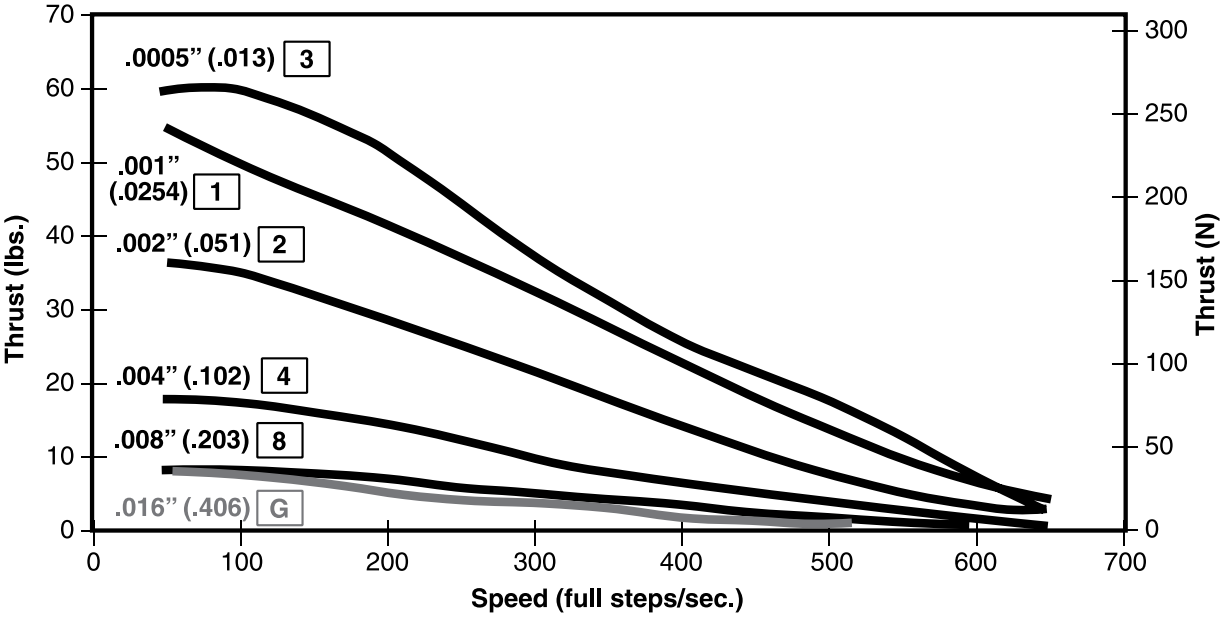

NOTE: All chopper drive curves were created with a 5 Volt motor and a 40 Volt power supply.

Ramping can increase the performance of a motor either by increasing the top speed or getting a heavier load accelerated up to speed faster. Also, deceleration can be used to stop the motor without overshoot.

Specially engineered can-stack linear actuators made with technology capable of temperatures beyond 155° C (311° F).

Haydon Kerk Motion Solutions, Inc. offers a line of stepping motors specially designed for high temperature environments. The motors are constructed using the proven techniques employed for Haydon™ motors. Special materials which meet IEEE class F temperature ratings of 155° C (311° F) are used in construction. Specialized components include high temperature bobbins, coils, lead wires, lubricant and adhesives. If your application requirements exceed 155°C contact our applications group for a customized solution.

20000 Series High Temperature

L/R Drive, 100% Duty Cycle

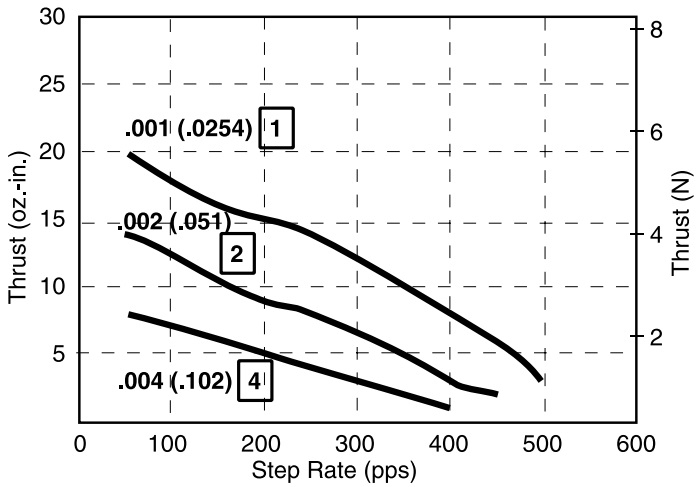

26000 Series High Temperature

L/R Drive, 100% Duty Cycle

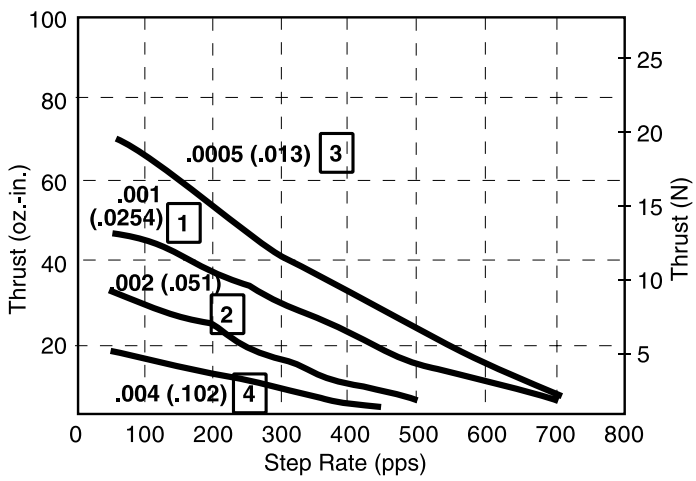

36000 Series High Temperature

L/R Drive, 100% Duty Cycle

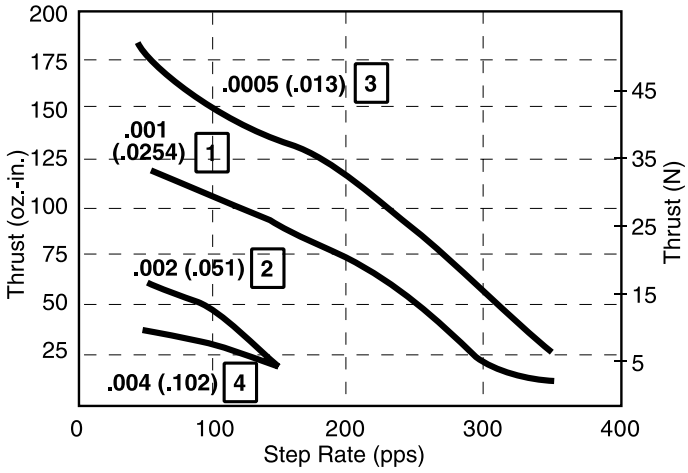

46000 Series High Temperature

L/R Drive, 100% Duty Cycle

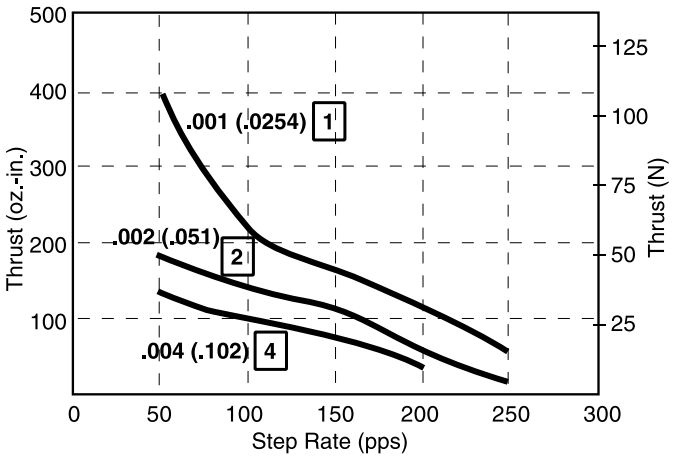

All data was taken at 155°C motor winding temperature (ambient temperature plus motor heat rise).

20000 Series, non-captive

26000 Series, non-captive

36000 Series, non-captive

46000 Series, non-captive

Teflon® coated leadscews for applications that require a permanent, dry lubricant

Haydon Kerk Motion Solutions, Inc. offers a Teflon® coated leadscrew option for its Can-Stack Series linear actuators. The use of a Teflon coated lead-screw allows for a "greaseless" screw and nut interface. This lead-screw option is ideal for applications where conventional oils and greases can not be used for lead-screw lubrication.

A non-lubricated Teflon coated lead-screw provides improved performance in both life and thrust as compared to a "dry" stainless steel lead-screw. Teflon can be applied to a wide variety of lead-screw pitches and is available for the Haydon™ captive, non-captive and external linear linear actuators.

The Teflon coated lead-screw is typically used for applications where contamination from grease or lubricants must be avoided, such as silicon wafer handling and clean room applications. Other applications include medical equipment, laboratory instrumentation or anywhere precise linear motion is required.

Teflon® 26000 Series

P/N T26542 • L/R Drive • 100% Duty Cycle

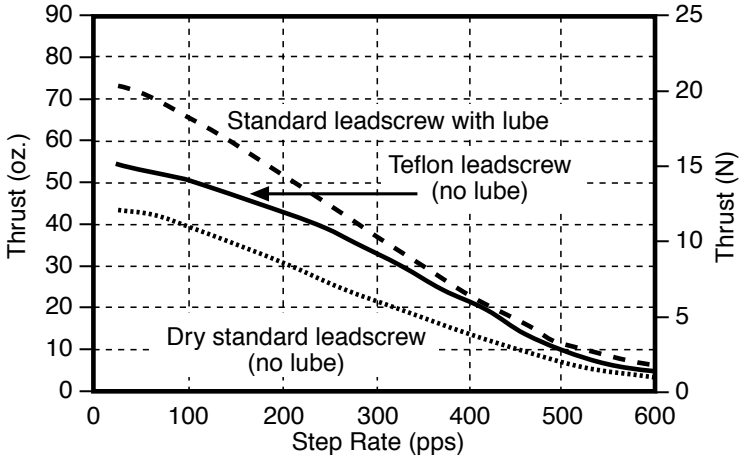

Teflon® 36000 Series

P/N T36441 • L/R Drive • 100% Duty Cycle

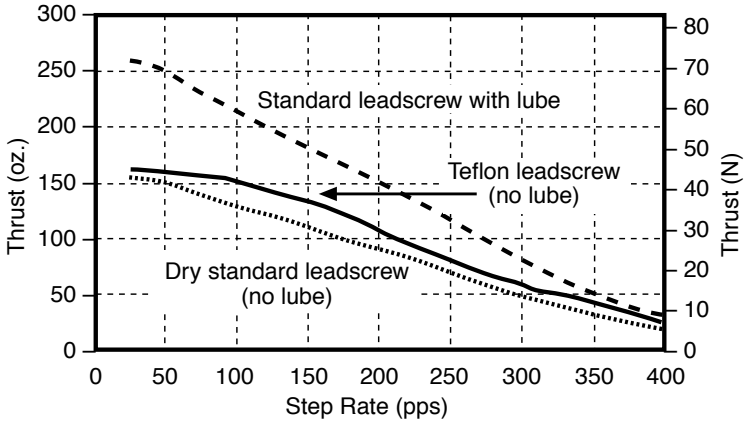

Teflon is a registered trademark of DuPont

Haydon Kerk Motion Solutions, Inc. • www.HaydonKerk.com • Phone: 800.243.2715 • International: 203.756.7441

Home Position Switch

A miniature electronic home position switch capable of monitoring the home positions of linear actuators. The switch mounts on the rear sleeve of captive linear motors and allows the user to identify start, stop or home postions. Depending on your preference, contacts can be normally open or normally closed. The contact closure is repeatable to within one step position, identifying linear movements as low as 0.0005-in (0.0013 cm) per step. Multiple contact switches are also available.

The switch allows device manufacturers the ability to monitor movements more precisely for greater control and improved Q.C. When ordering motors with the home position switch, the part number should be preceded by an “S”.

Technical Data

Contact Ratings (Standard):	1.00 AMP @ 120 VAC 1.00 AMP @ 28 VDC
Operating Temperature:	-30°C to +55°C (-22°F to 131°F)
Contact Resistance:	< 20 milliohms typ. initial at 2-4 V DC, 100 mA
Electrical Life:	Tested to 60,000 make-and-break cycles at full load
Schematic:	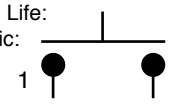 Multiple contact options available.

End of Stroke Proximity Sensor

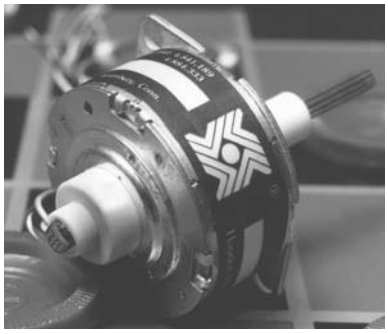

36000 series with end of stroke proximity sensor (without protective cap).

The sensor incorporates a hall effect device, which is activated by a rare earth magnet embedded in the end of the internal screw. The compact profile of the sensor allows for installation in limited space applications.

The sensor has virtually unlimited cycle life. Special cabling and connectors can also be provided.

Technical Data

Supply Voltage (VDC):	3.8 min. to 24 max.
Current consumption:	10 mA max.
Output voltage (operated):	0.15 typ., 0.40 max.; Sinking 20 mA max.
Output current:	20 mA max.
Output leakage current (released):	10μA max. @ Vout = 24 VDC; Vcc = 24 VDC
Output switching time	
Rise, 10 to 90%:	.05 μs typ., 1.5 μs max. @ Vcc = 12 V, RL = 1.6 KOhm
Fall, 90 to 10%:	.15 μs typ., 1.5 μs max. @ CL = 20 pF

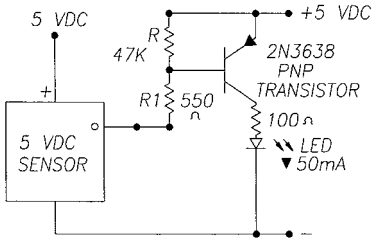

Note: Sensor is category 2 ESD sensitive per DOD-STD-1686A. Assembly operations should be performed at workstations with conductive tops and operators grounded.

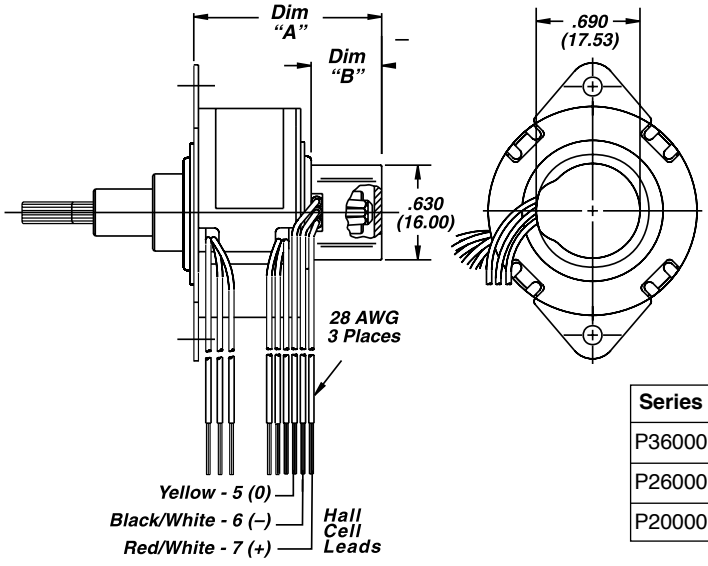

Series	Dim. “A”	Dim. “B”
P36000	1.220 (31.0)	.470 (12.0)
P26000	0.950 (24.13)	.370 (9.4)
P20000	1.120 (28.45)	.470 (12.0)

Innovative designs that go beyond our standard lines

In addition to our standard linear actuators described in this catalog, Haydon Kerk Motion Solutions, Inc. offers an extensive range of custom configurations. The diversity or our customers' linear motor applications have required our engineering and manufacturing teams to develop custom configurations for today's most advanced technologies. The following examples illustrate some of the customized motors HaydonKerk Motion Solutions™ produces. If your application requires something not shown, give us a call and we will be happy to work with you to develop a custom solution.

Example No. 1
Rear shaft protection

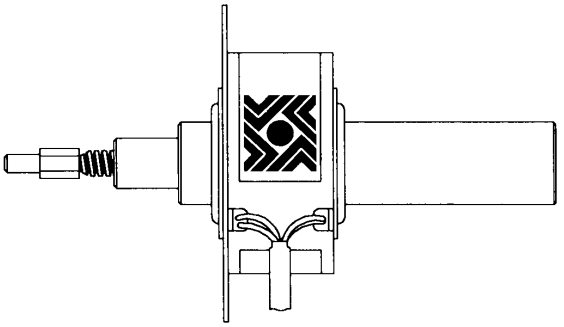

Example No. 2
Motor lead termination techniques

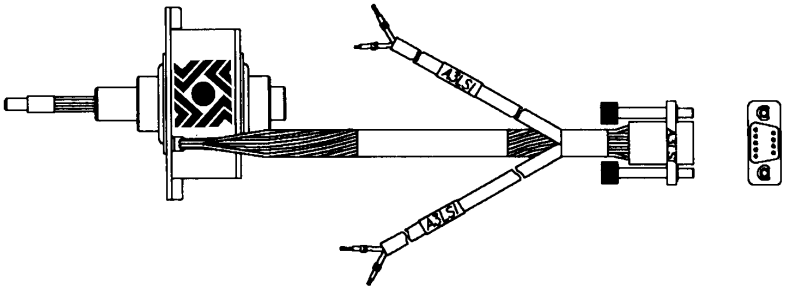

Example No. 3
Sub-assembly/
harnessing/
motor termination

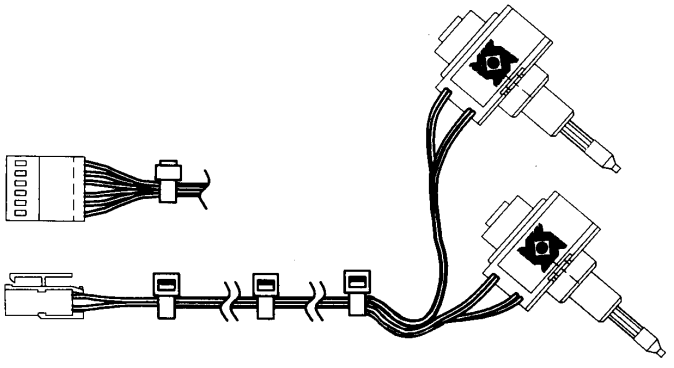

Example No. 4
Threaded front
sleeve without
mounting flange.

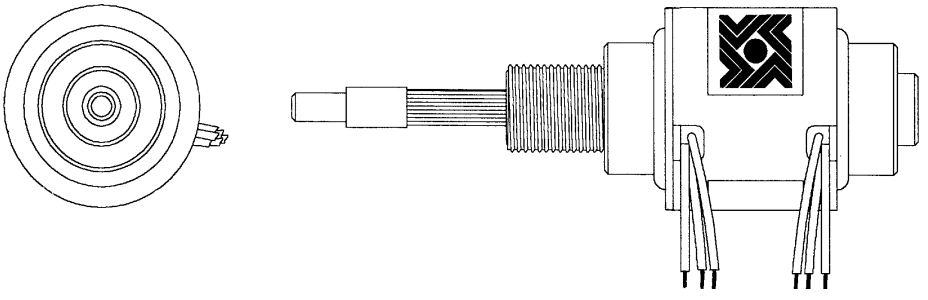

Haydon Kerk Motion Solutions, Inc. • www.HaydonKerk.com • Phone: 800.243.2715 • International: 203.756.7441

Haydon Kerk Motion Solutions, Inc. also offers rotary motors that are built to provide exceptionally high torque to size ratios.

By utilizing a patented enlarged rotor with low inductance coils, the motors provide superior torque and continuous, reliable high performance. At rated voltage, the 46 mm motor produces 16 oz.-in. of holding torque, the 36 mm motor produces 4.5 oz.-in., the 26 mm motor produces 1.8 oz.-in. and the 20 mm motor produces 0.65 oz.-in. Optional rare earth magnets may be specified for even higher torque. Bronze sleeve bearings are standard, ball bearings are also available.

Haydon Kerk Motion Solutions, Inc. has patented technology and the facilities to produce these motors in high volume. We provide rapid turn-around for prototypes and production orders. Custom designs and special engineering requirements such as special shaft diameters, lengths and mounting flanges are welcome.

Some typical applications for Haydon rotary motors include medical equipment, bar code scanning devices, printing equipment, laboratory instrumentation and other high torque, small space mechanisms.

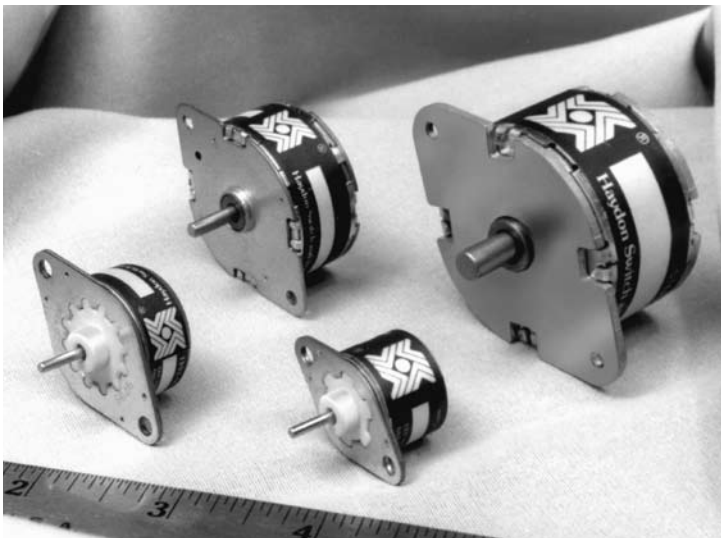

Part Number Construction: ***Rotary Stepper Motors***

T	26	4	4	0	–	05	–	999

Prefix
(only when using the following)

T = High Temp.
R = Rare earth magnet

Series number designation:

26 = 26000

Available Series:
Z20000
Z26000
36000
46000

(Series numbers represent diameters of motor body)

Style

4 = 7.5°
5 = 15°

Coils

4 = Bipolar (4 wire)
6 = Unipolar (6 wire)

Code ID Resolution Travel/Step

0 = Rotary

Voltage

(Example: 05 = 5 VDC; 12 = 12 VDC) Custom V available

Suffix:

–999 = ball bearings

–XXX = Special or custom
(Special part numbers for custom screw lengths and design options will require an issued 3 digit suffix number. Please contact our sales or applications engineering department for assistance.)

EXAMPLES:

T26440-05 = High temperature, 26000 series (Ø26 mm, 1-in), 7.5°, bipolar coils, rotary motor, 5 VDC

36540-12-999 = 36000 series (Ø36 mm, 1.4-in), 15°, bipolar coils, rotary motor, 12 VDC, ball bearings

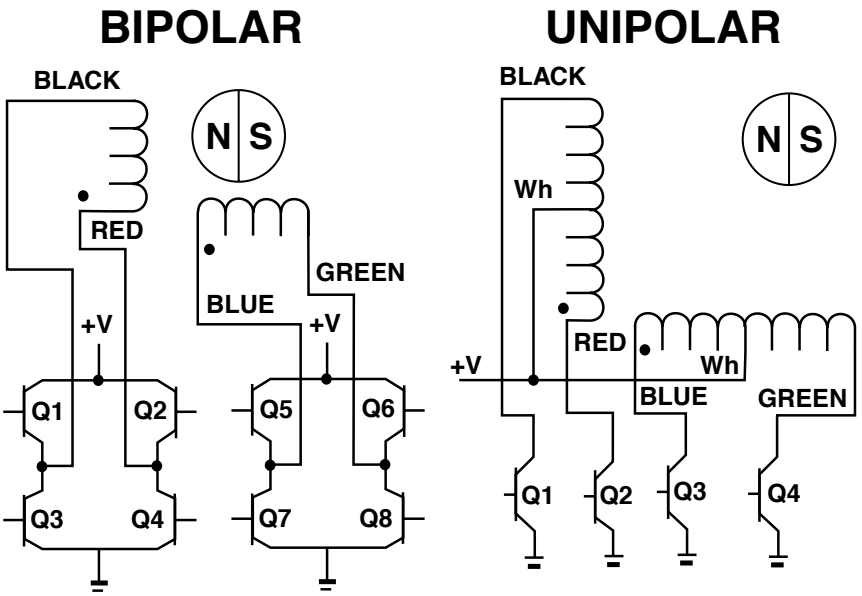

Rotary Stepper Motors: Stepping Sequence

Bipolar	Q2-Q3	Q1-Q4	Q6-Q7	Q5-Q8
Unipolar	Q1	Q2	Q3	Q4
Step				
1	ON	OFF	ON	OFF
2	OFF	ON	ON	OFF
3	OFF	ON	OFF	ON
4	ON	OFF	OFF	ON
1	ON	OFF	ON	OFF

CW Rotation ▼ ▲ CCW Rotation

Note: Half stepping is accomplished by inserting an off state between transitioning phases.
Shaft rotation as viewed from the output shaft.

Z20000 Series: Ø 20 mm (.79-in) Rotary Motors

Sleeve Bearing Motor

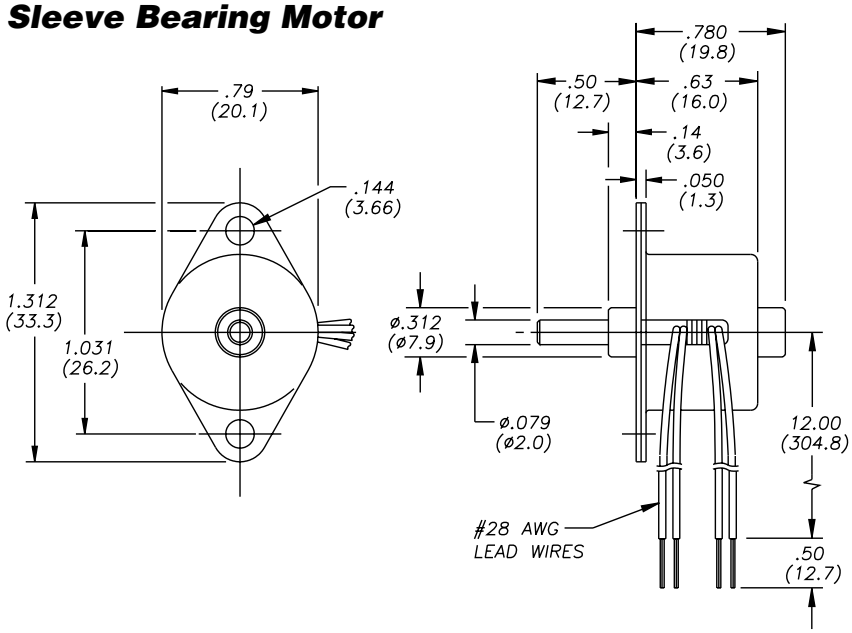

Select Sleeve
or Ball Bearing Designs

Ball Bearing Motor

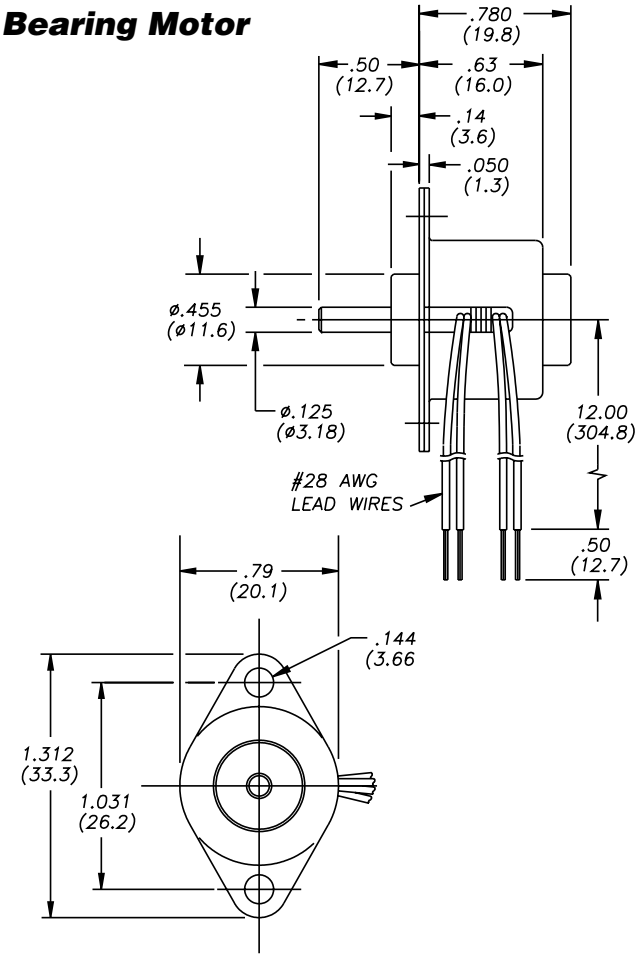

Salient Characteristics

Ø 20 mm (3/4") Rotary Stepper		
Wiring	Bipolar	
Part No. (Sleeve)*	Z20540-05	Z20540-12
Step angle	15°	
Winding voltage	5 VDC	12 VDC
Current/phase	250 mA	100 mA
Resistance/phase	20 Ω	118 Ω
Inductance/phase	5.5 mH	32 mH
Hold torque	.65 oz-in. (.46 Ncm)	
Detent torque	.17 oz-in. (.12 Ncm)	
Power consumption	2.5 W	
Rotor Inertia	1.13 gcm^2	
Weight	.80 oz. (22.7 g)	
Insulation resistance	20 MΩ	
Temperature rise	135°F Rise (75°C Rise)	

*For Ball Bearings add " –999" to the end of this number

TORQUE vs FULL STEP/SECOND
L/R DRIVE • BIPOLAR • 15° STEP ANGLE

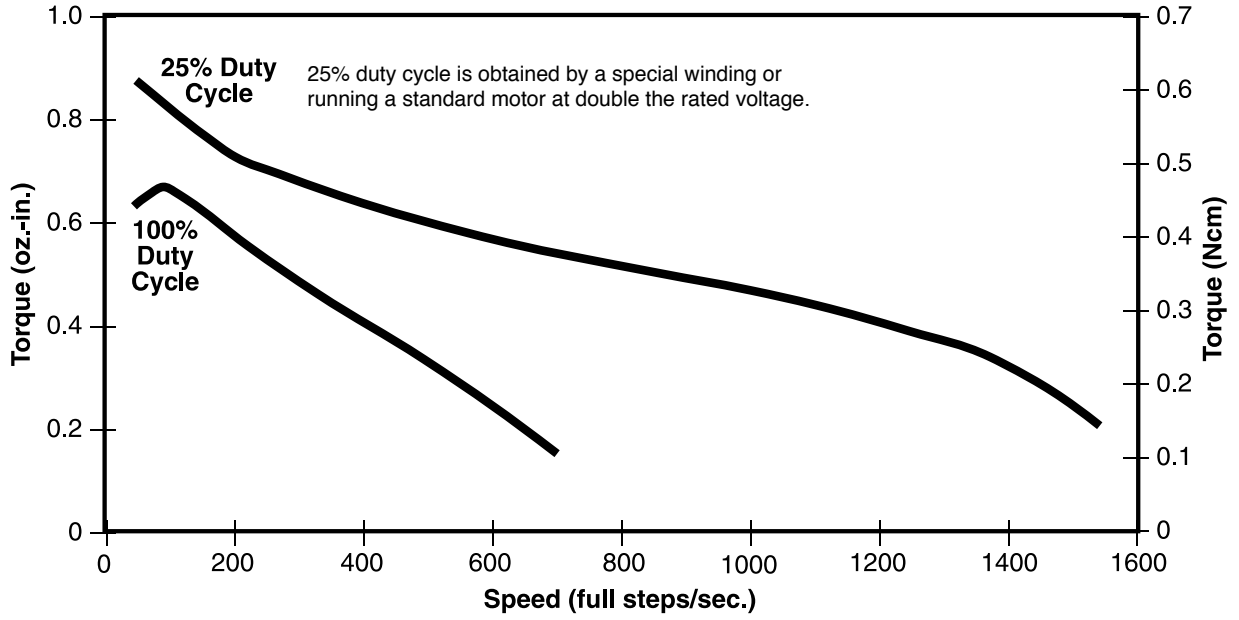

CHOPPER DRIVE • BIPOLAR • 15° STEP ANGLE

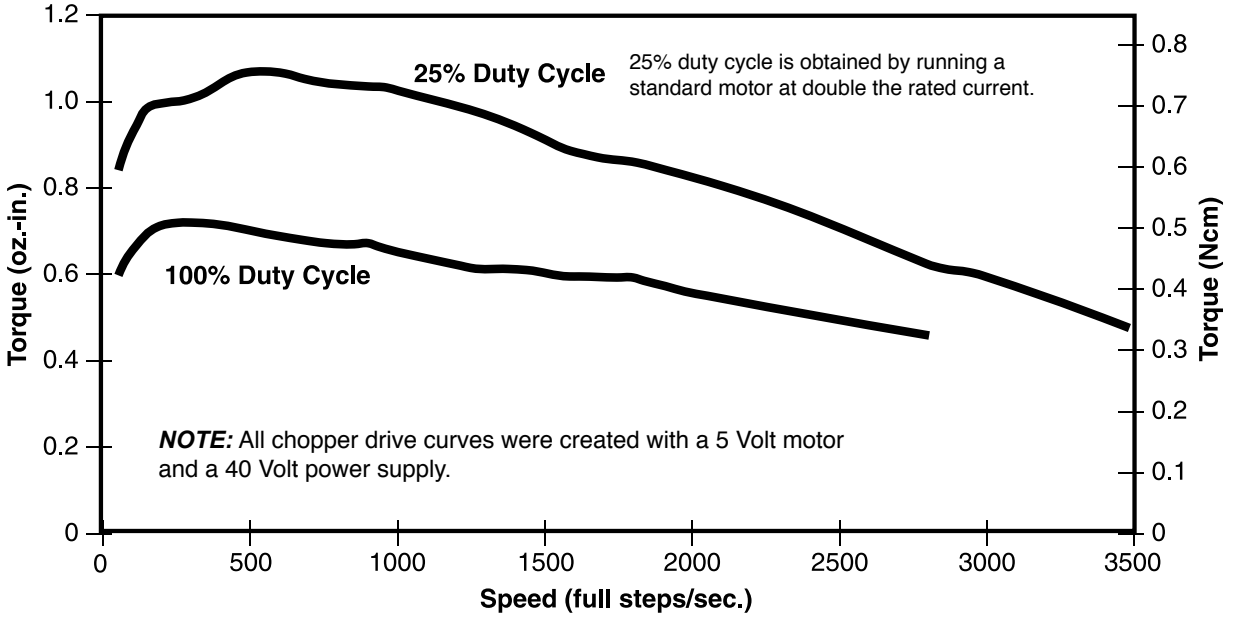

FOR BOTH L/R and CHOPPER DRIVES: Ramping can increase the performance of a motor either by increasing the top speed or getting a heavier load accelerated up to speed faster. Also, deceleration can be used to stop the motor without overshoot.

26000 Series: Ø 26 mm (1-in) Rotary Motors

Select Sleeve or Ball Bearing Designs

Other styles available...

- Z-Series
- High Temperature Option

Salient Characteristics

Ø 26 mm (1-in) Rotary Stepper Motor				
Wiring	Bipolar			
Part No. (Sleeve)*	26440-05	26440-12	26540-05	26540-12
Step angle	7.5°		15°	
Winding voltage	5 VDC	12 VDC	5 VDC	12 VDC
Current/phase	340 mA	140 mA	340 mA	140 mA
Resistance/phase	14.7 Ω	84 Ω	14.7 Ω	84 Ω
Inductance/phase	8.5 mH	55 mH	6.7 mH	44 mH
Hold torque	1.6 oz-in. (1.13 Ncm)		1.3 oz-in. (.92 Ncm)	
Detent torque	.12 oz-in. (.09 Ncm)		.14 oz-in. (.10 Ncm)	
Power consumption	3.4 W			
Rotor Inertia	1.2 gcm^2			
Weight	1 oz. (28 g)			
Insulation resistance	20 MΩ			
Temperature rise	135°F Rise (75°C Rise)			

Ø 26 mm (1-in) Rotary Stepper Motor			
Unipolar			
26460-05	26460-12	26560-05	26560-12
7.5°		15°	
5 VDC	12 VDC	5 VDC	12 VDC
340 mA	140 mA	340 mA	140 mA
14.7 Ω	84 Ω	14.7 Ω	84 Ω
4.3 mH	24 mH	3.4 mH	19 mH
1.2 oz-in (.85 Ncm)		.9 oz-in. (.64 Ncm)	
.12 oz-in (.09 Ncm)		.14 oz-in. (.10 Ncm)	
3.4 W			
1.2 gcm^2			
1 oz. (28 g)			
20 MΩ			
135°F Rise (75°C Rise)			

*For Ball Bearings add " –999" to the end of this number

Dimensional Drawings:

Sleeve Bearing

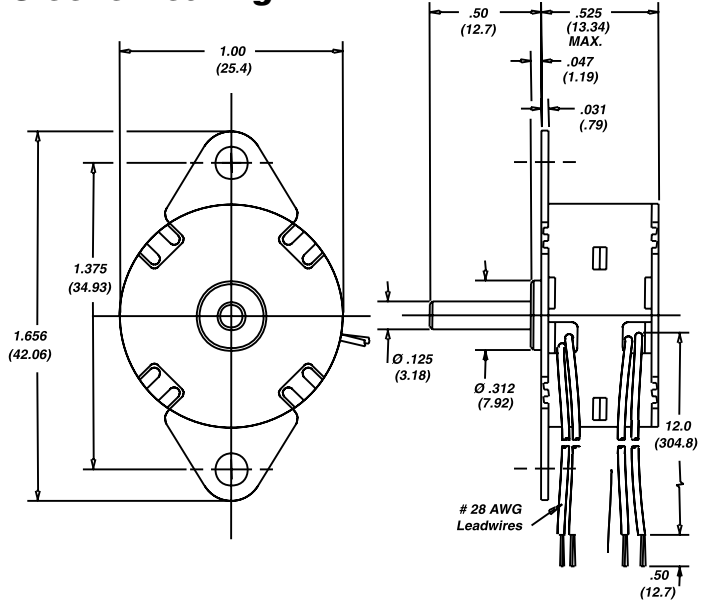

Ball Bearing

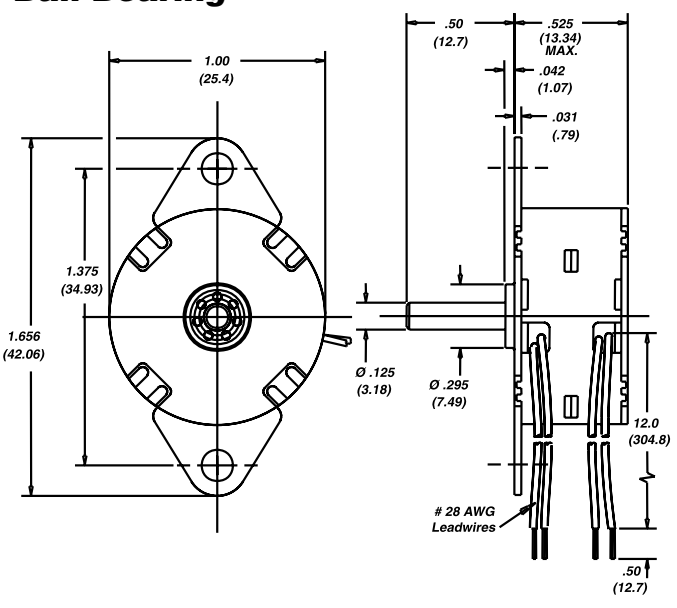

TORQUE vs FULL STEPS/SECOND

Bipolar • L/R Drive 7.5° Step Angle

25% duty cycle is obtained by a special winding or running a standard motor at double the rated voltage.

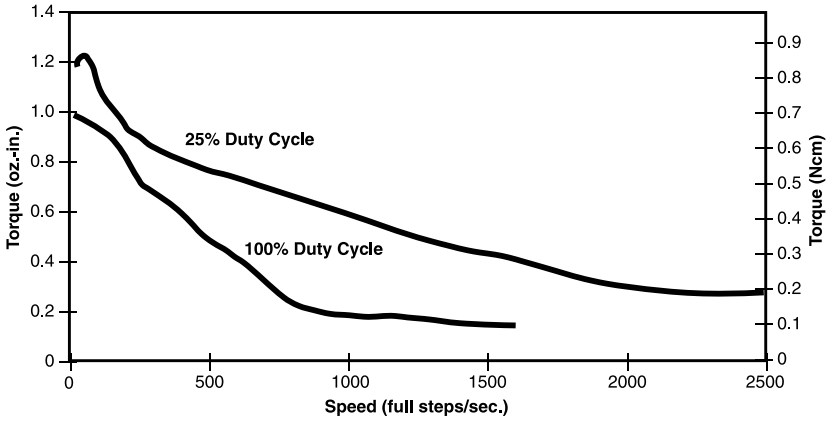

Bipolar • L/R Drive 15° Step Angle

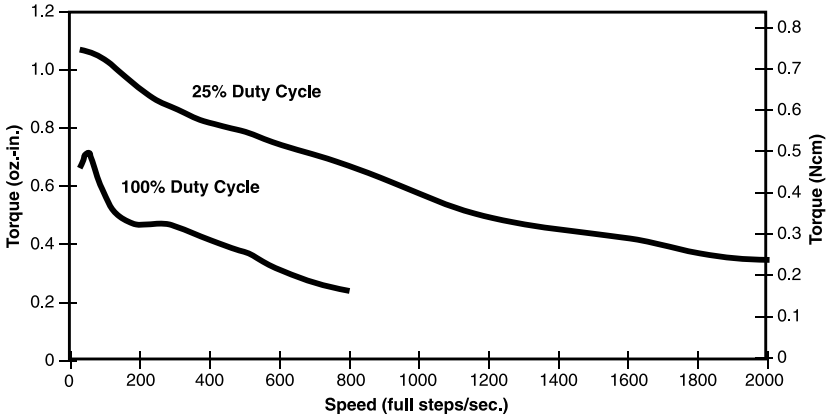

Unipolar • L/R Drive 7.5° Step Angle

25% duty cycle is obtained by a special winding or running a standard motor at double the rated voltage.

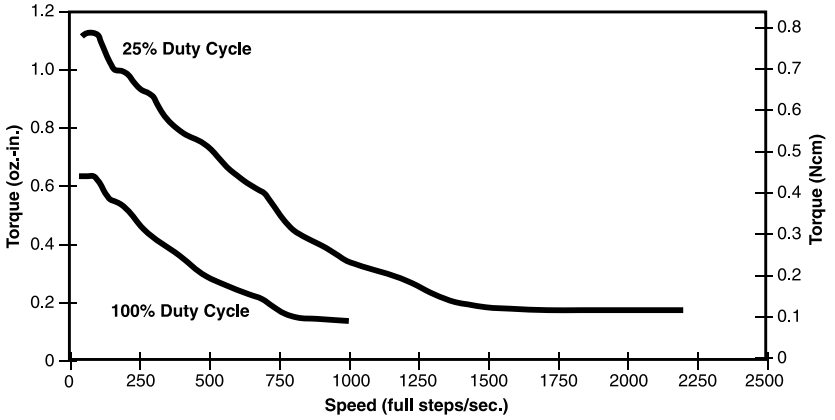

Unipolar • L/R Drive 15° Step Angle

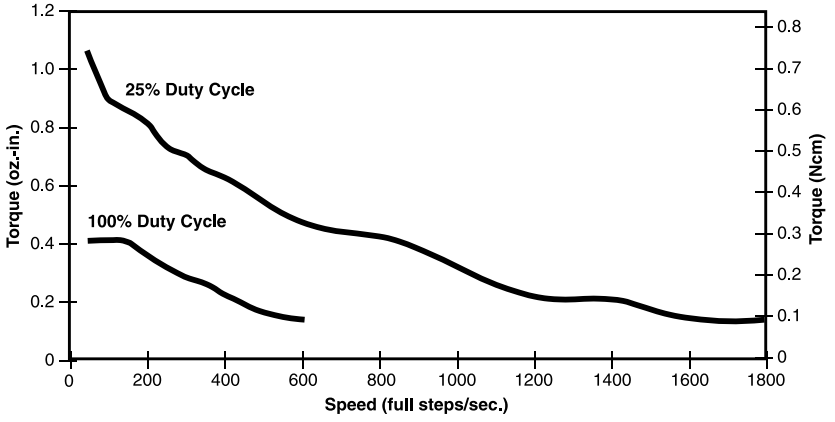

NOTE: Ramping can increase the performance of a motor either by increasing the top speed or getting a heavier load accelerated up to speed faster. Also, deceleration can be used to stop the motor without overshoot.

TORQUE vs FULL STEP/SECOND
CHOPPER DRIVE • BIPOLAR • 7.5° STEP ANGLE

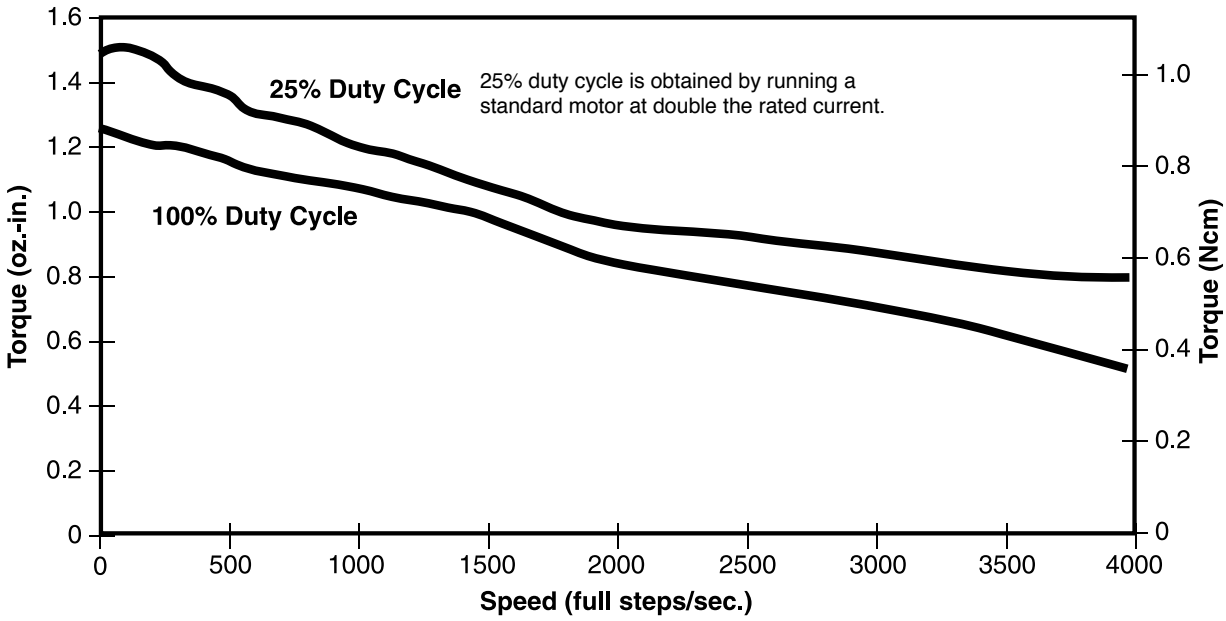

CHOPPER DRIVE • BIPOLAR • 15° STEP ANGLE

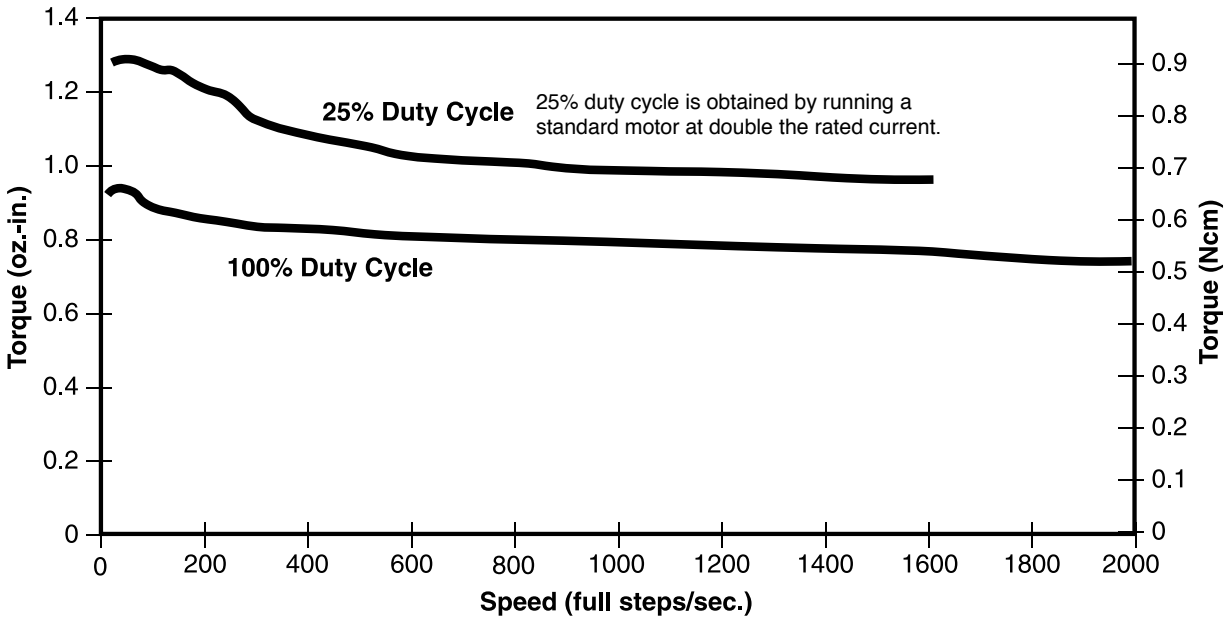

NOTE: All chopper drive curves were created with a 5 Volt motor and a 40 Volt power supply.

Ramping can increase the performance of a motor either by increasing the top speed or getting a heavier load accelerated up to speed faster. Also, deceleration can be used to stop the motor without overshoot.

Z26000 Series: Ø 26 mm (1.0-in) Economy Rotary Motors

Designed for high volume production

Select Sleeve or Ball Bearing Designs

Salient Characteristics

Ø 26 mm (1-in) Rotary Stepper Motor				
Wiring	Bipolar			
Part No. (Sleeve)*	Z26440-05	Z26440-12	Z26540-05	Z26540-12
Step angle	7.5°		15°	
Winding voltage	5 VDC	12 VDC	5 VDC	12 VDC
Current/phase	340 mA	140 mA	340 mA	140 mA
Resistance/phase	14.7 Ω	84 Ω	14.7 Ω	84 Ω
Inductance/phase	8.5 mH	55 mH	6.7 mH	44 mH
Hold torque	1.8 oz-in. (1.27 Ncm)		1.5 oz-in. (1.06 Ncm)	
Detent torque	.25 oz-in (.18 Ncm)		.35 oz-in. (.25 Ncm)	
Power consumption	3.4 W			
Rotor Inertia	1.40 gcm^2			
Weight	1.15 oz. (32.6 g)			
Insulation resistance	20 MΩ			
Temperature rise	135°F Rise (75°C Rise)			

Ø 26 mm (1-in) Rotary Stepper Motor			
Unipolar			
Z26460-05	Z26460-12	Z26560-05	Z26560-12
7.5°		15°	
5 VDC	12 VDC	5 VDC	12 VDC
340 mA	140 mA	340 mA	140 mA
14.7 Ω	84 Ω	14.7 Ω	84 Ω
4.3 mH	24 mH	3.4 mH	19 mH
1.3 oz-in. (.92 Ncm)		1 oz-in. (.71 Ncm)	
.25 oz-in (.18 Ncm)		.35 oz-in (.25 Ncm)	
3.4 W			
1.40 gcm^2			
1.15 oz. (32.6 g)			
20 MΩ			
135°F Rise (75°C Rise)			

*For Ball Bearings add " –999" to the end of this number

Dimensional Drawings:

Sleeve Bearing

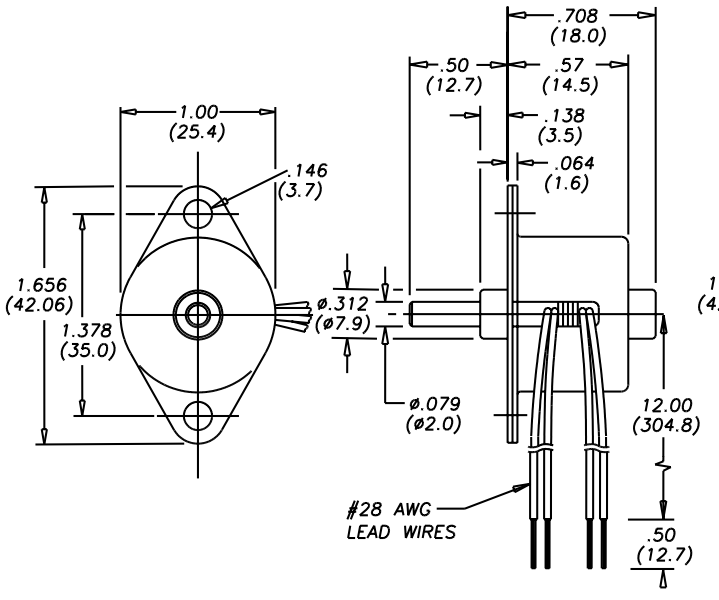

Ball Bearing

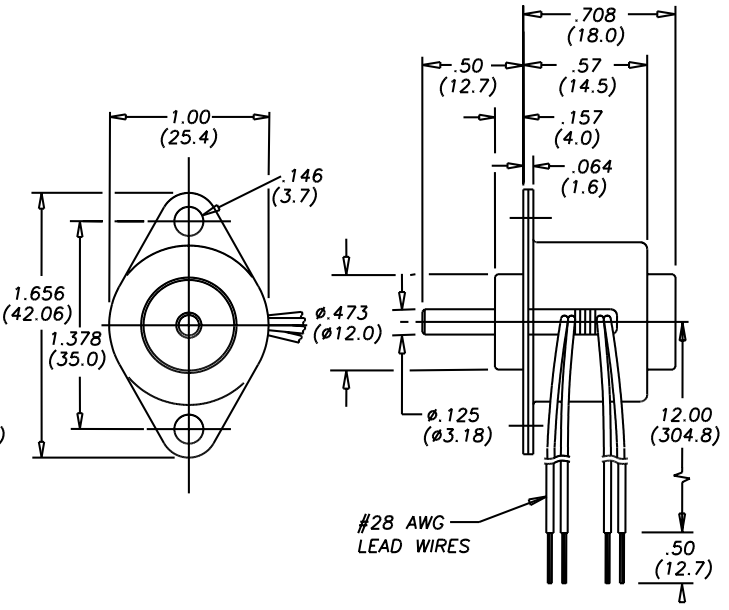

Haydon Kerk Motion Solutions, Inc. • www.HaydonKerk.com • Phone: 800.243.2715 • International: 203.756.7441

TORQUE vs FULL STEPS/SECOND

Bipolar • L/R Drive 7.5° Step Angle

25% duty cycle is obtained by a special winding or running a standard motor at double the rated voltage.

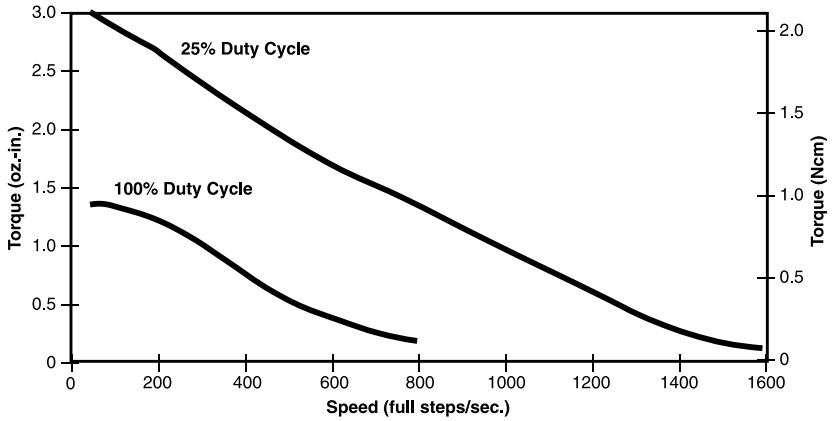

Bipolar • L/R Drive 15° Step Angle

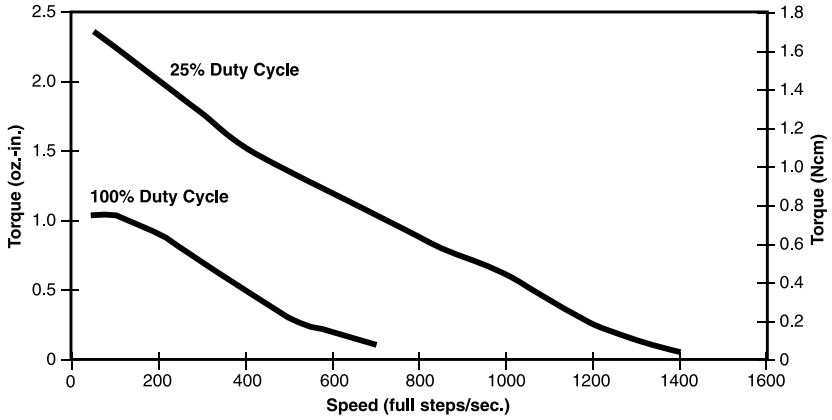

Unipolar • L/R Drive 7.5° Step Angle

25% duty cycle is obtained by a special winding or running a standard motor at double the rated voltage.

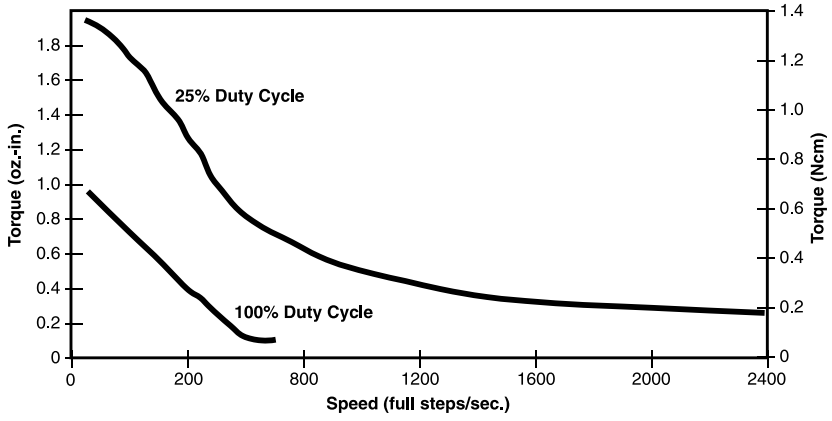

Unipolar • L/R Drive 15° Step Angle

NOTE: Ramping can increase the performance of a motor either by increasing the top speed or getting a heavier load accelerated up to speed faster. Also, deceleration can be used to stop the motor without overshoot.

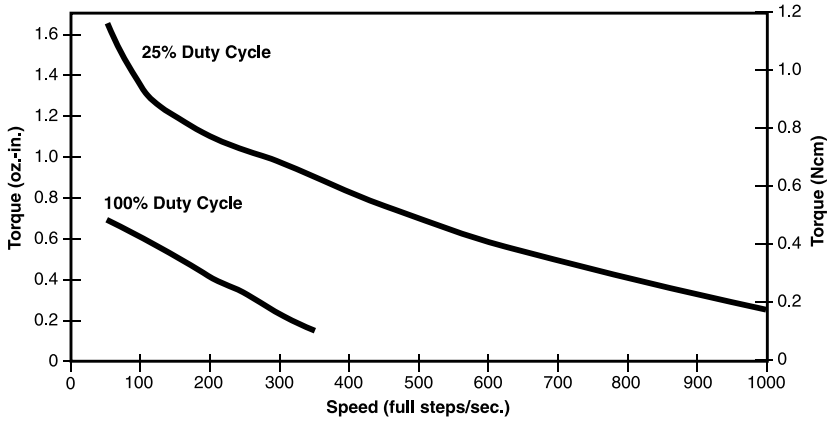

TORQUE vs FULL STEP/SECOND
CHOPPER DRIVE • BIPOLAR • 7.5° STEP ANGLE

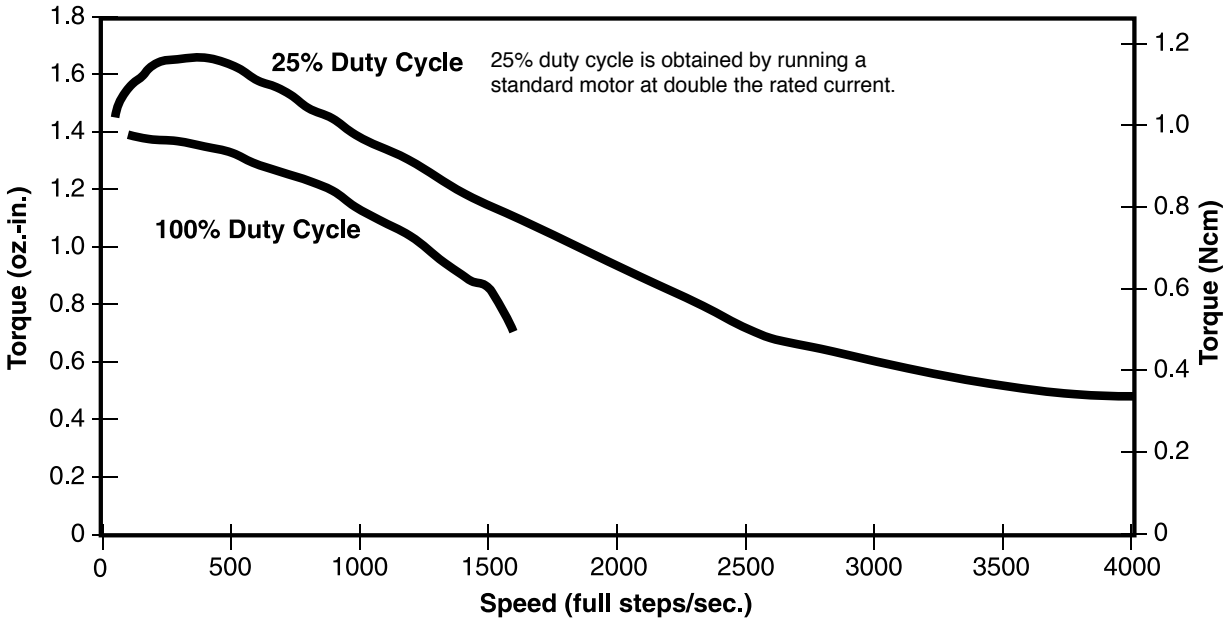

CHOPPER DRIVE • BIPOLAR • 15° STEP ANGLE

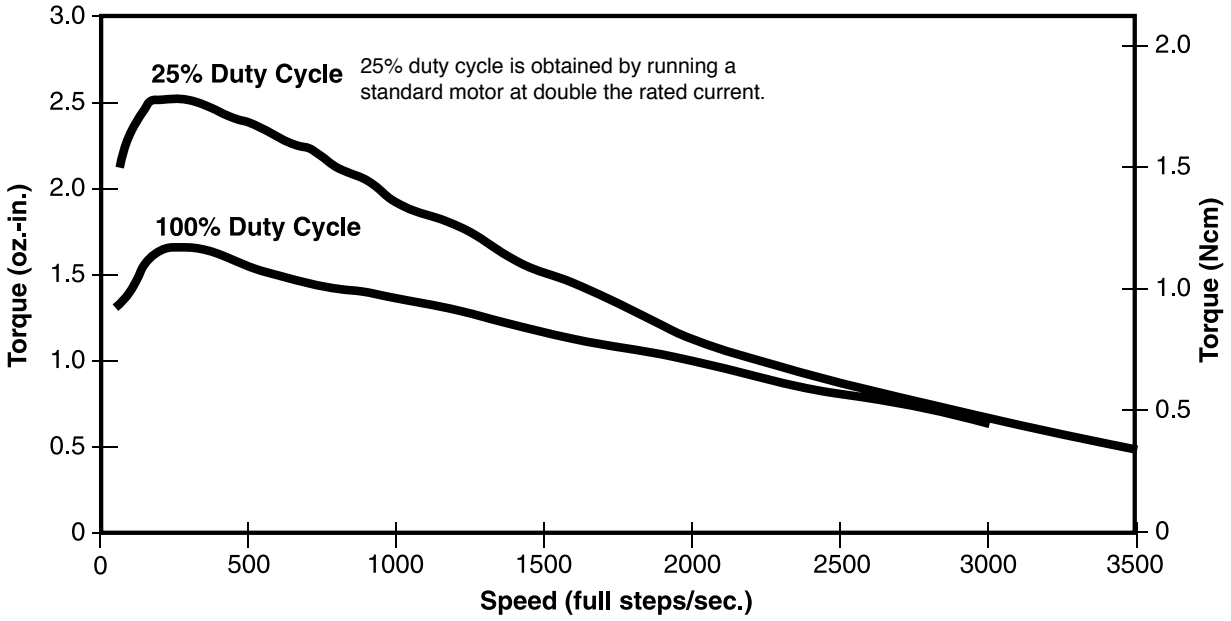

NOTE: All chopper drive curves were created with a 5 Volt motor and a 40 Volt power supply.

Ramping can increase the performance of a motor either by increasing the top speed or getting a heavier load accelerated up to speed faster. Also, deceleration can be used to stop the motor without overshoot.

Haydon Kerk Motion Solutions, Inc. • www.HaydonKerk.com • Phone: 800.243.2715 • International: 203.756.7441

36000 Series: Ø 36 mm (1.4-in) Rotary Motors

Select Sleeve or Ball Bearing Designs

Other styles available...

- High Temperature Option

Salient Characteristics

Ø 36 mm (1.4-in) Rotary Stepper Motor				
Wiring	Bipolar			
Part No. (Sleeve)*	36440-05	36440-12	36540-05	36540-12
Step angle	7.5°		15°	
Winding voltage	5 VDC	12 VDC	5 VDC	12 VDC
Current/phase	460 mA	190 mA	460 mA	190 mA
Resistance/phase	11 Ω	63 Ω	11 Ω	63 Ω
Inductance/phase	7.2 mH	45 mH	5.5 mH	35 mH
Hold torque	4.5 oz-in. (3.18 Ncm)		2.9 oz-in. (2.05 Ncm)	
Detent torque	.28 oz-in. (.20 Ncm)		.37 oz-in. (.26 Ncm)	
Power consumption	4.6 W			
Rotor Inertia	10.5 gcm^2			
Weight	2.5 oz. (70 g)			
Insulation resistance	20 MΩ			
Temperature rise	135°F Rise (75°C Rise)			

Ø 36 mm (1.4-in) Rotary Stepper Motor			
Unipolar			
36460-05	36460-12	36560-05	36560-12
7.5°		15°	
5 VDC	12 VDC	5 VDC	12 VDC
460 mA	190 mA	460 mA	190 mA
11 Ω	63 Ω	11 Ω	63 Ω
3.8 mH	19 mH	3.0 mH	15 mH
3.0 oz-in. (2.12 Ncm)		2.0 oz-in. (1.41 Ncm)	
.28 oz-in. (.20 Ncm)		.37 oz-in. (.26 Ncm)	
4.6 W			
10.5 gcm^2			
2.5 oz. (70 g)			
20 MΩ			
135°F Rise (75°C Rise)			

*For Ball Bearings add " –999" to the end of this number

Dimensional Drawings:

Sleeve Bearing

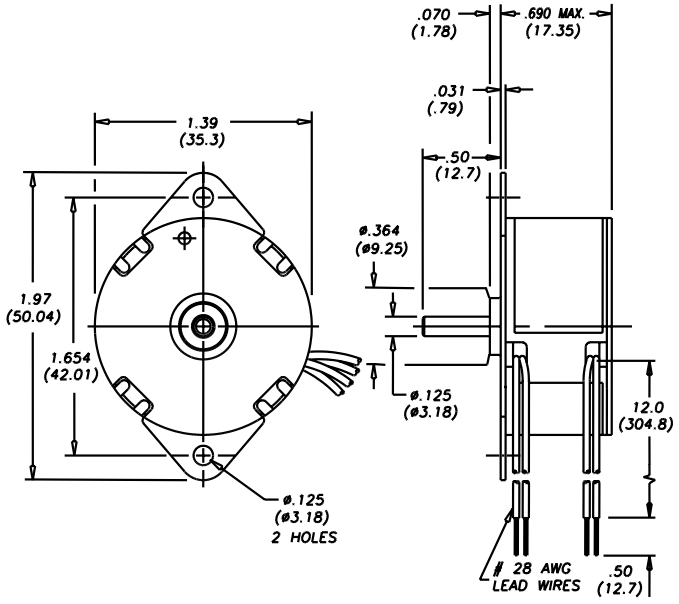

Ball Bearing

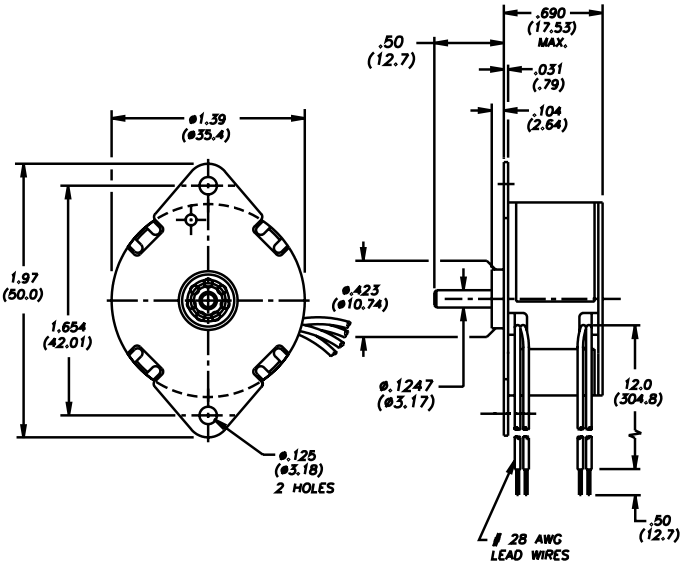

TORQUE vs FULL STEPS/SECOND

Bipolar • L/R Drive 7.5° Step Angle

25% duty cycle is obtained by a special winding or running a standard motor at double the rated voltage.

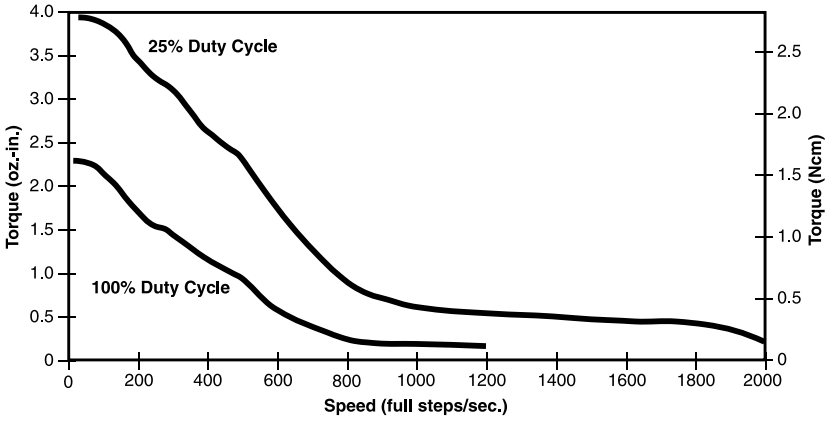

Bipolar • L/R Drive 15° Step Angle

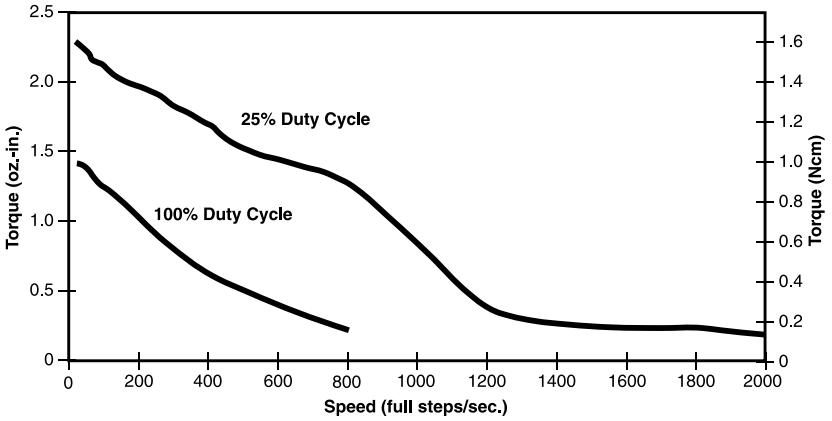

Unipolar • L/R Drive 7.5° Step Angle

25% duty cycle is obtained by a special winding or running a standard motor at double the rated voltage.

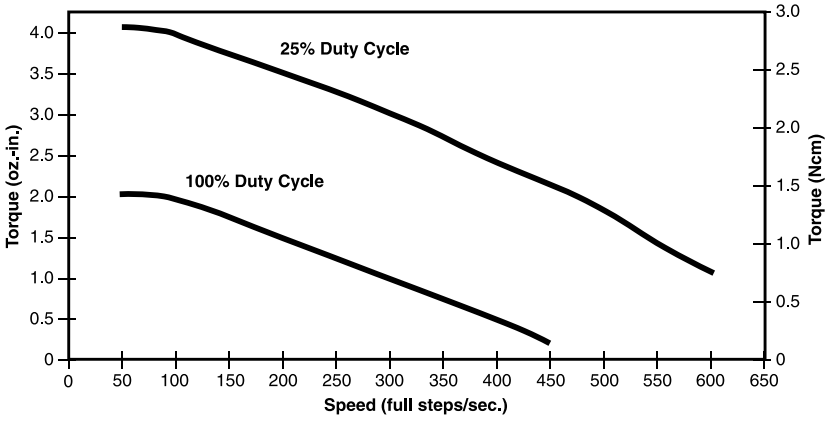

Unipolar • L/R Drive 15° Step Angle

NOTE: Ramping can increase the performance of a motor either by increasing the top speed or getting a heavier load accelerated up to speed faster. Also, deceleration can be used to stop the motor without overshoot.

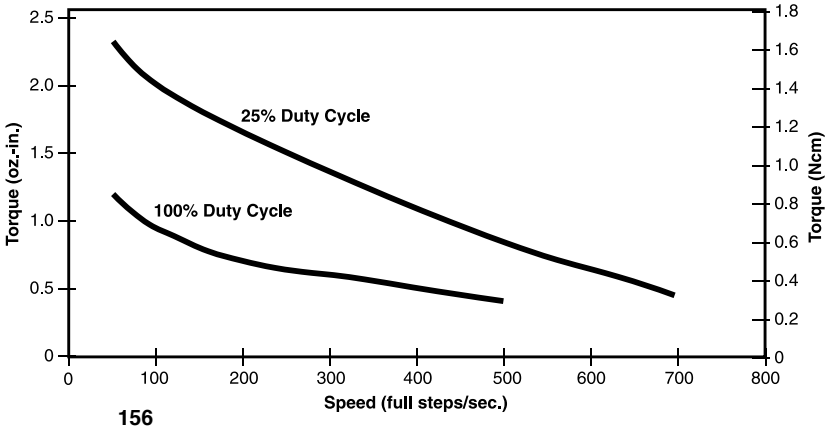

TORQUE vs FULL STEP/SECOND
CHOPPER DRIVE • BIPOLAR • 7.5° STEP ANGLE

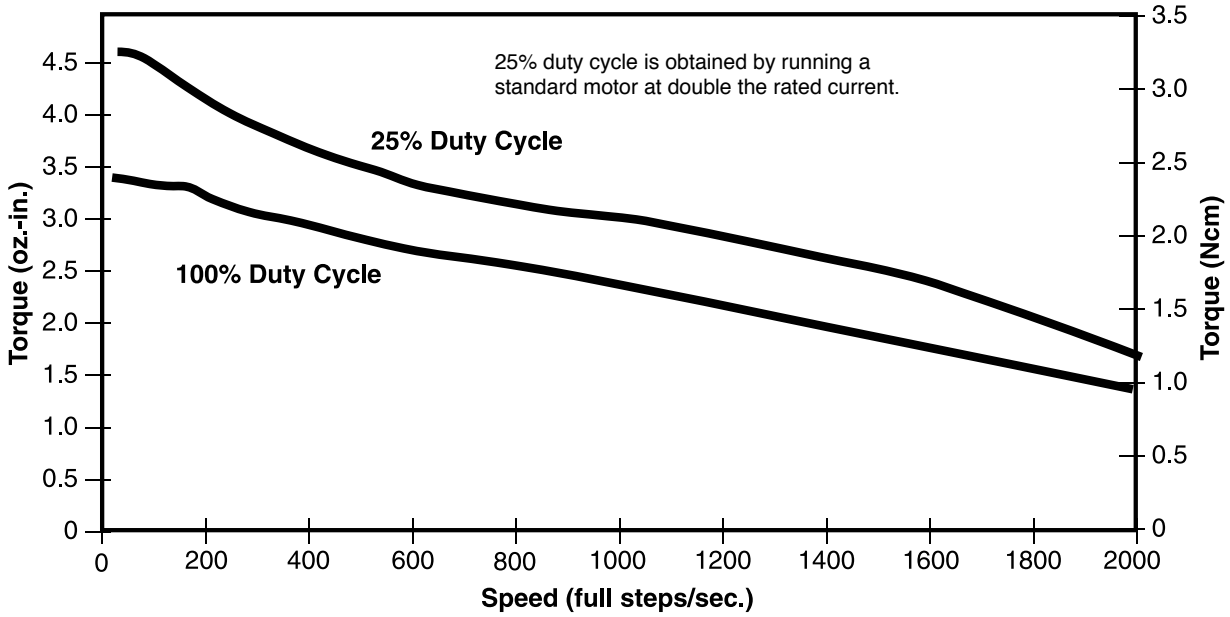

CHOPPER DRIVE • BIPOLAR • 15° STEP ANGLE

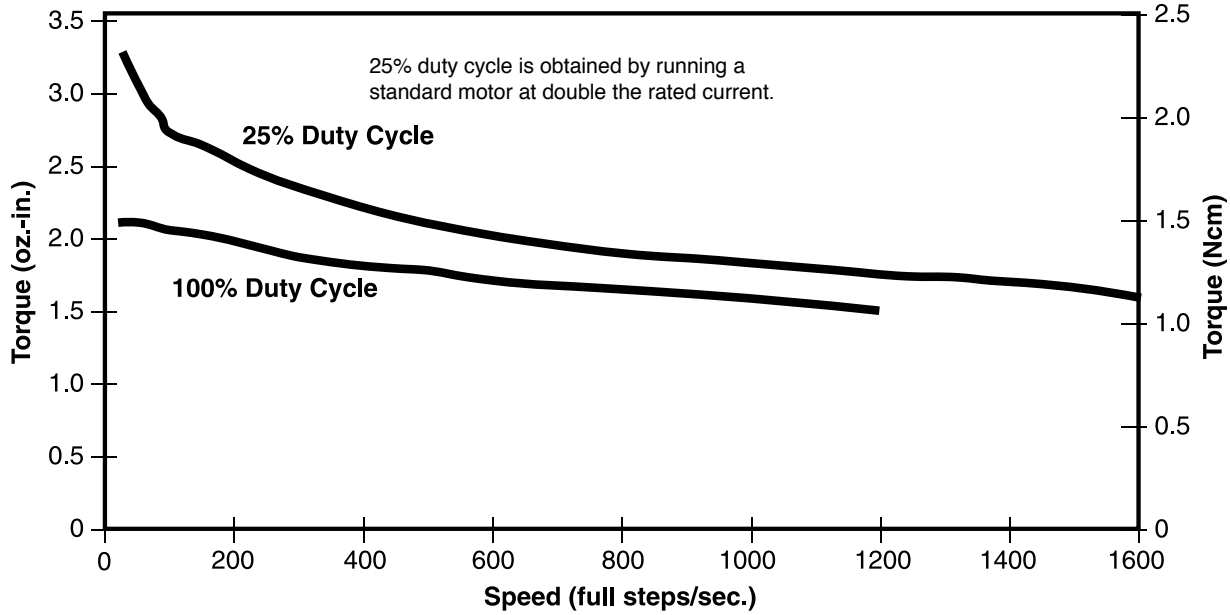

NOTE: All chopper drive curves were created with a 5 Volt motor and a 40 Volt power supply.

Ramping can increase the performance of a motor either by increasing the top speed or getting a heavier load accelerated up to speed faster. Also, deceleration can be used to stop the motor without overshoot.

Haydon Kerk Motion Solutions, Inc. • www.HaydonKerk.com • Phone: 800.243.2715 • International: 203.756.7441

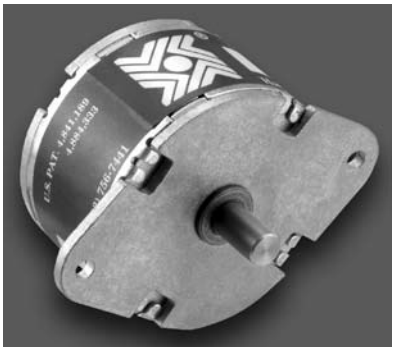

46000 Series: Ø 46 mm (1.8-in) Rotary Motors

Our most powerful rotary motor

Select Sleeve or Ball Bearing Designs

Other styles available...

- High Temperature Option

Salient Characteristics

Ø 46 mm (1.8-in) Rotary Stepper Motor				
Wiring	Bipolar			
Part No. (Sleeve)*	46440-05	46440-12	46540-05	46540-12
Step angle	7.5°		15°	
Winding voltage	5 VDC	12 VDC	5 VDC	12 VDC
Current/phase	1.0 A	.41 A	1.0 A	.41 A
Resistance/phase	5 Ω	29 Ω	5 Ω	29 Ω
Inductance/phase	9.0 mH	52 mH	7.1 mH	39 mH
Hold torque	16 oz-in. (11.30 Ncm)		8.5 oz-in. (6.00 Ncm)	
Detent torque	.90 oz-in. (.64 Ncm)		1.0 oz-in. (.71 Ncm)	
Power consumption	10 W			
Rotor Inertia	25.0 gcm^2			
Weight	7.8 oz. (220 g)			
Insulation resistance	20 MΩ			
Temperature rise	135°F Rise (75°C Rise)			

Ø 46 mm (18-in) Rotary Stepper Motor			
Unipolar			
46460-05	46460-12	46560-05	46560-12
7.5°		15°	
5 VDC	12 VDC	5 VDC	12 VDC
1.0 A	.41 A	1.0 A	.41 A
5 Ω	29 Ω	5 Ω	29 Ω
4.5 mH	26 mH	3.5 mH	20 mH
13.0 oz-in. (9.18 Ncm)		6.0 oz-in. (4.24 Ncm)	
.90 oz-in (.64 Ncm)		1.0 oz-in. (.71 Ncm)	
10 W			
25 gcm^2			
7.8 oz. (220 g)			
20 MΩ			
135°F Rise (75°C Rise)			

*For Ball Bearings add " –999" to the end of this number

Dimensional Drawings:

Sleeve Bearing

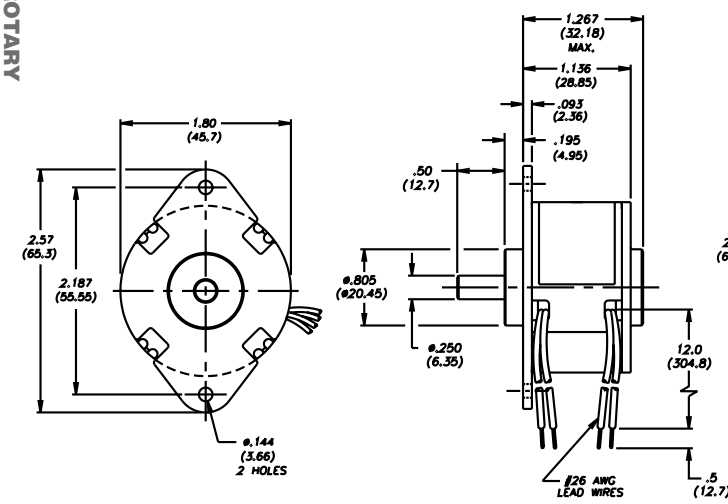

Ball Bearing

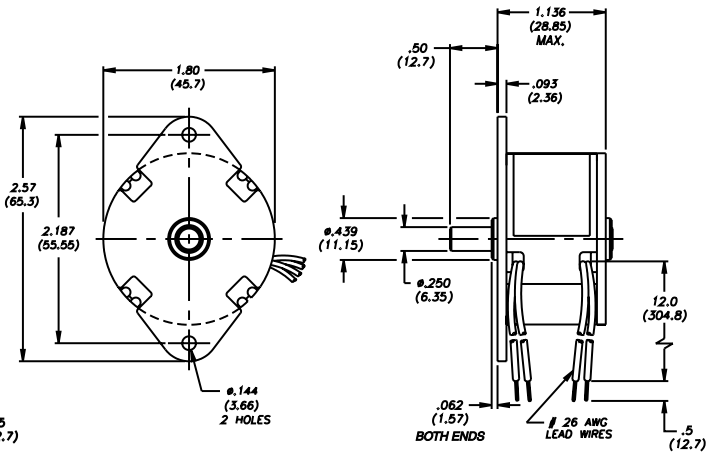

Haydon Kerk Motion Solutions, Inc. • www.HaydonKerk.com • Phone: 800.243.2715 • International: 203.756.7441

TORQUE vs FULL STEPS/SECOND

Bipolar • L/R Drive 7.5° Step Angle

25% duty cycle is obtained by a special winding or running a standard motor at double the rated voltage.

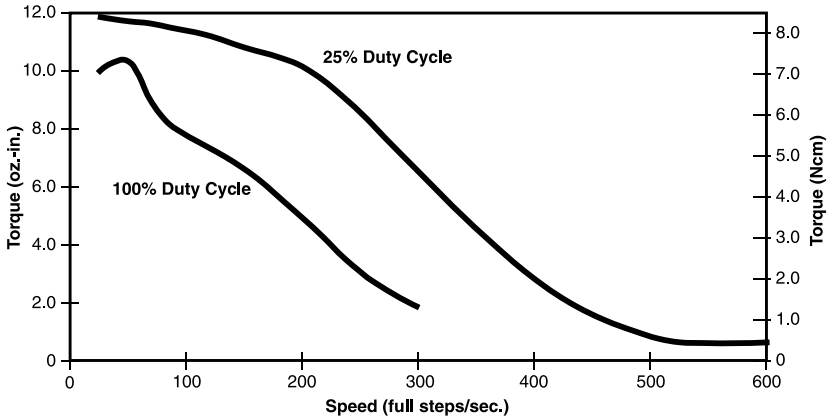

Bipolar • L/R Drive 15° Step Angle

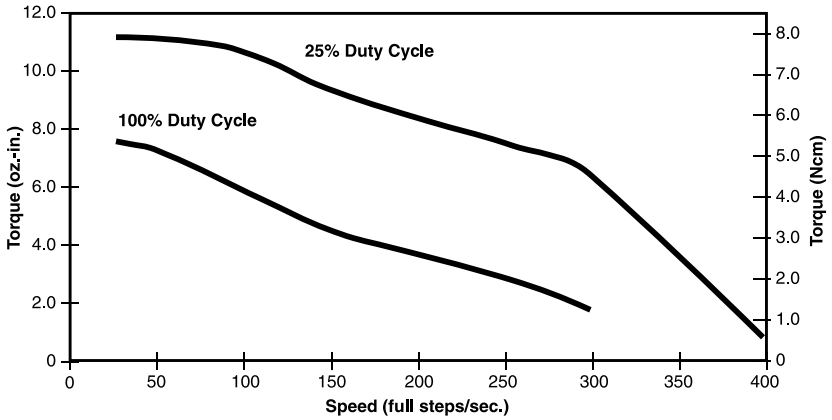

Unipolar • L/R Drive 7.5° Step Angle

25% duty cycle is obtained by a special winding or running a standard motor at double the rated voltage.

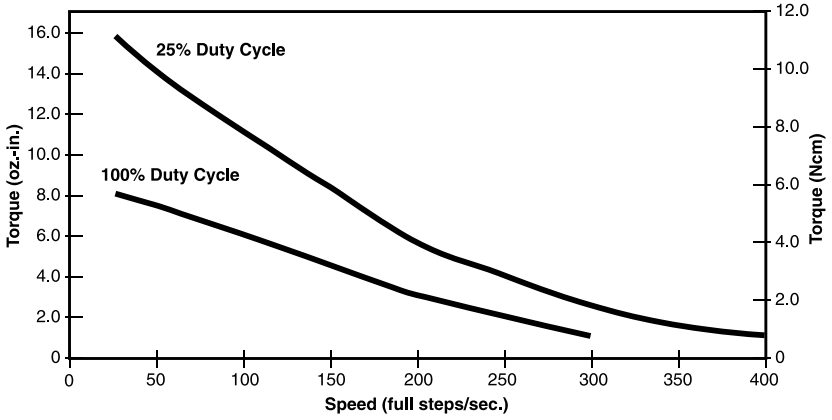

Unipolar • L/R Drive 15° Step Angle

NOTE: Ramping can increase the performance of a motor either by increasing the top speed or getting a heavier load accelerated up to speed faster. Also, deceleration can be used to stop the motor without overshoot.

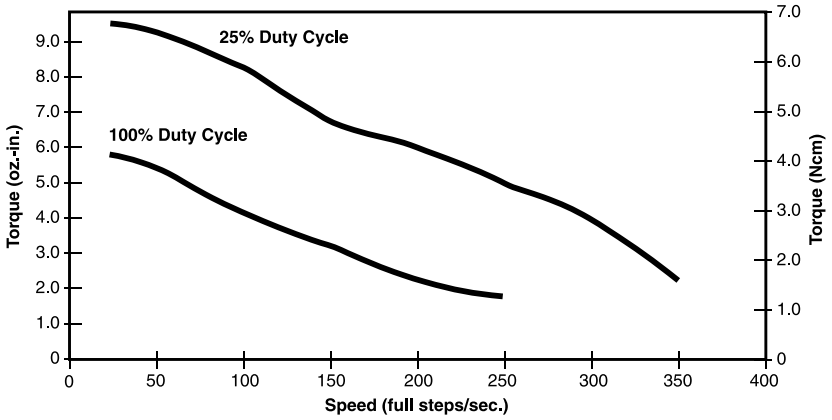

Haydon Kerk Motion Solutions, Inc. • www.HaydonKerk.com • Phone: 800.243.2715 • International: 203.756.7441

TORQUE vs FULL STEP/SECOND
CHOPPER DRIVE • BIPOLAR • 7.5° STEP ANGLE

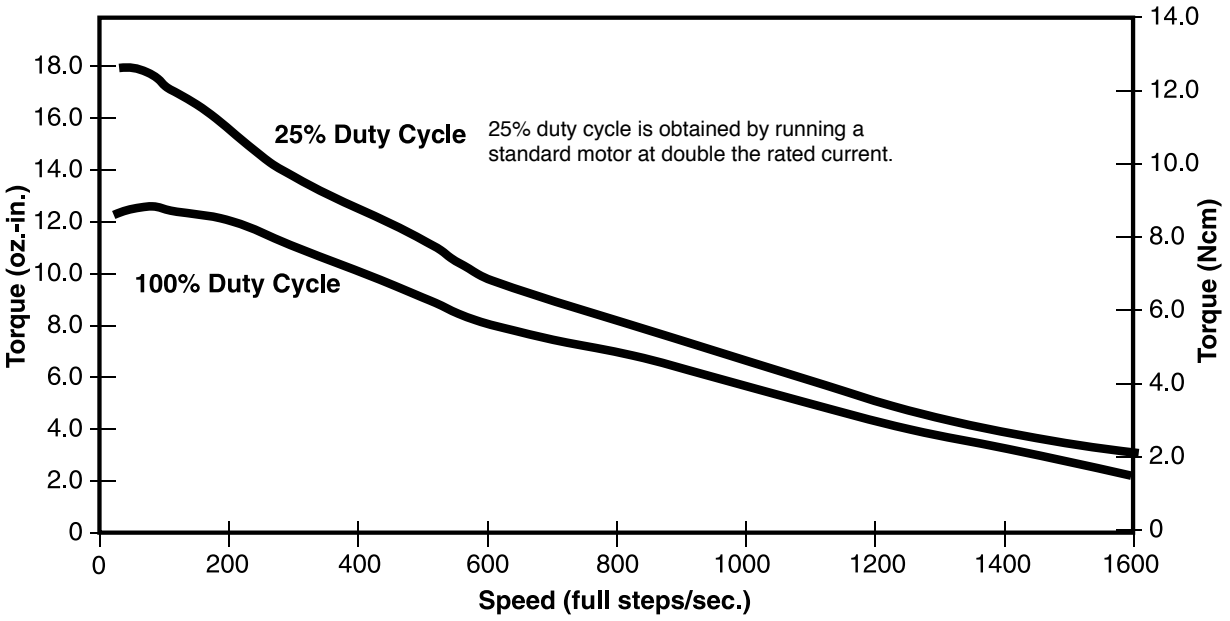

CHOPPER DRIVE • BIPOLAR • 15° STEP ANGLE

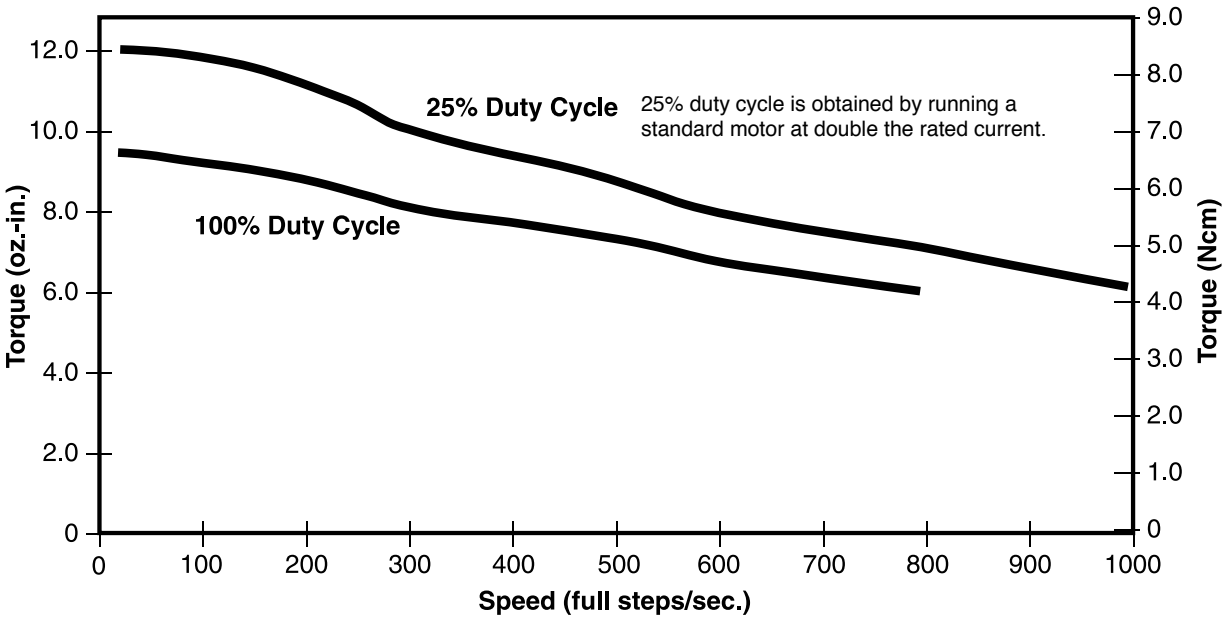

NOTE: All chopper drive curves were created with a 5 Volt motor and a 40 Volt power supply.

Ramping can increase the performance of a motor either by increasing the top speed or getting a heavier load accelerated up to speed faster. Also, deceleration can be used to stop the motor without overshoot.

80000 Series Pancake Stepper Motors with very low profiles and high torque

Salient Characteristics

Ø 80 mm (3.15-in) Pancake Stepper	
Part number	80240-12
Wiring	Bipolar (Unipolar optional)
Step angle	3.75°
Winding voltage	12 VDC
Current/phase	.50 A
Resistance/phase	24 Ω
Inductance/phase	24 mH
Hold torque	20 oz-in (14.12 Ncm)
Power consumption	12 W
Rotor Inertia	120 gcm^2
Weight	7.75 oz (220 g)
Insulation resistance	20 MΩ
Temperature rise	90°F Rise (50°C Rise)
Bearings	Radial Ball

The Haydon™ 80000 Series stepper motor is designed for applications where accurate positioning, high torque and very thin packaging are desirable characteristics. This motor has a maximum diameter of 3.15-in (80 mm) and is less than 1/2-in (12.7 mm) thick.

Typical two-phase can-stack motors have coils mounted alongside each other, requiring a certain minimum thickness.

This pancake motor features a patented design, in which one coil is mounted inside the other. The motor's permanent magnet rotor is a ring that is located in between the coils.

Applications include business machines, computer peripherals and industrial equipment and automation. Accommodations can be made for configurations that require unipolar coils, special shafts and other mountings.

80000 Series Dimensional Drawing

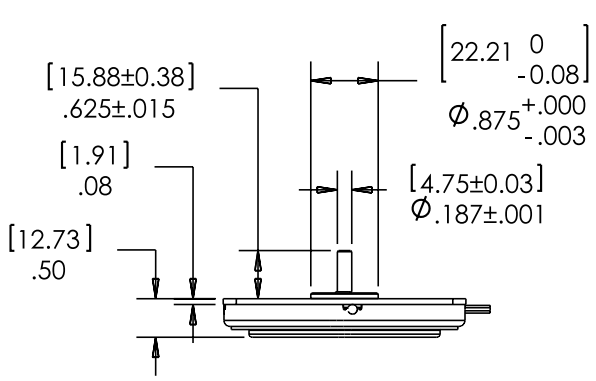

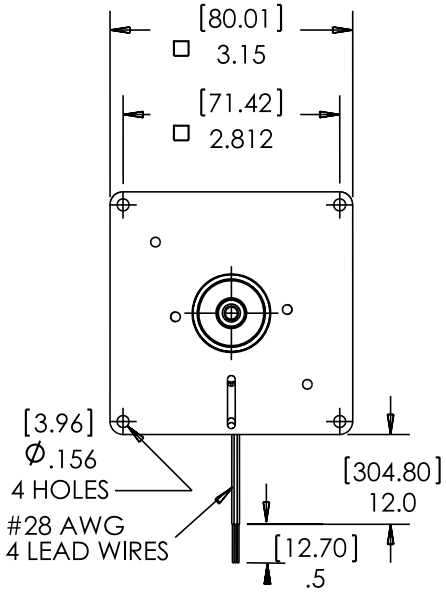

Torque vs Full Step per Second

L/R Drive Bipolar

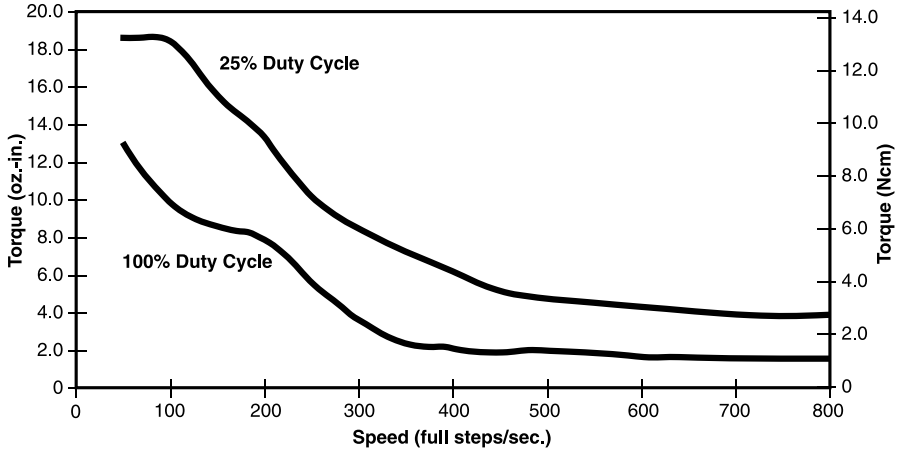

NOTE: Ramping can increase the performance of a motor either by increasing the top speed or getting a heavier load accelerated up to speed faster. Also, deceleration can be used to stop the motor without overshoot.

0.75-in (20 mm) height, 3.15-in (80 mm) sq. and 100 oz.-in. (70 Ncm) of torque

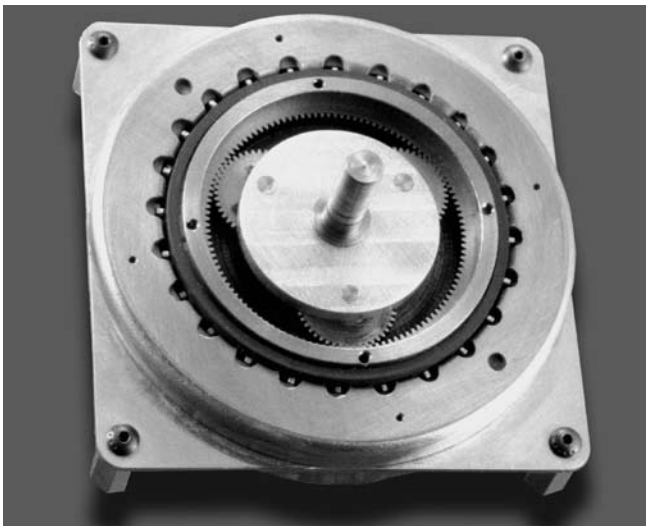

Part modified to illustrate gearing. Actual gears are not exposed in standard packaging.

For a given size motor, the larger the rotor the greater the torque. Haydon Kerk Motion Solutions, Inc. provides an advanced, compact, low profile pancake stepper motor with a specially engineered, rotor-embedded, single-stage planetary gear train...designed to meet or exceed your most demanding small space high-torque applications.

Salient Characteristics

Ø 80 mm (3.15-in.) Planetary Gear Train Pancake Stepper Motor			Code
Part number	**80GHX – V – Z**		
Wiring (Part # code Z)	Bipolar		Z = 42
Gear Ratios/Step angle (Part # code X)	4:1 = 0.9375°		X = 04
Winding voltage (Part # code V)	5 VDC		V = 05
		12 VDC	V = 12
Current/phase	1.4 A	.58 A	
Resistance/phase*	3.6 Ω	20.6 Ω	
Step Angle	3.75		
Insulation resistance	20 mΩ		
Power consumption	14 W		
Weight	12 oz (343 g)		
Temperature rise	90°F Rise (50°C Rise)		
Travel Direction	Reversible		
Bearings	Radial Ball		

*±10% at 25°C (77°F) ambient

Planetary Gear Train Components

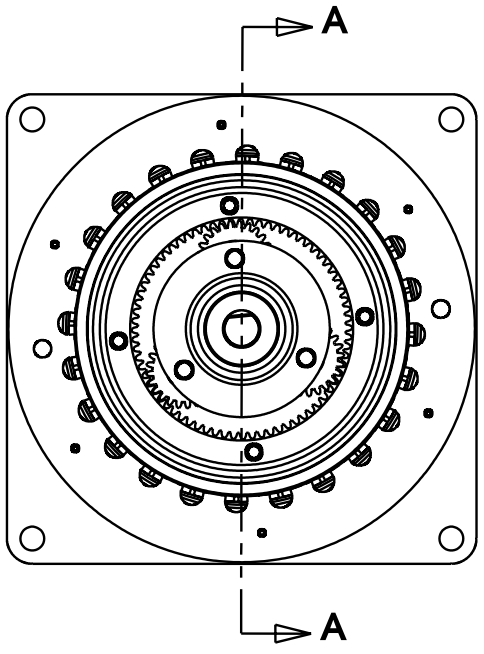

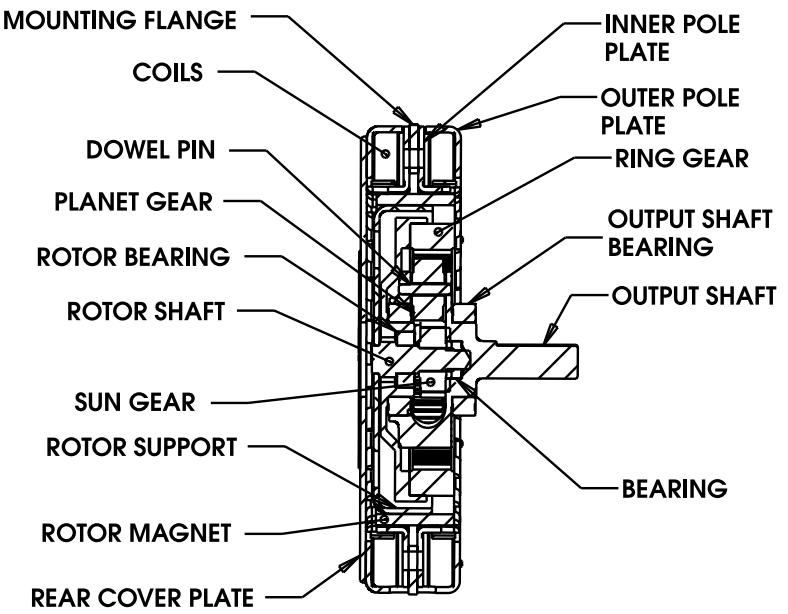

80GHX

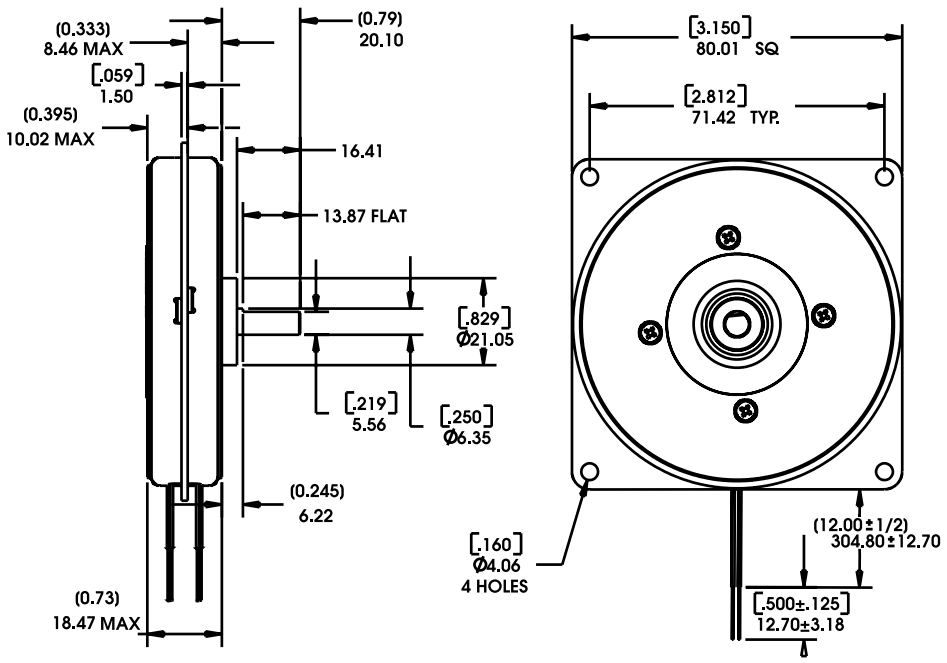

Planetary Gear Train Performance Curves

Torque vs Full Step/Second • 4:1 Gear Ratio

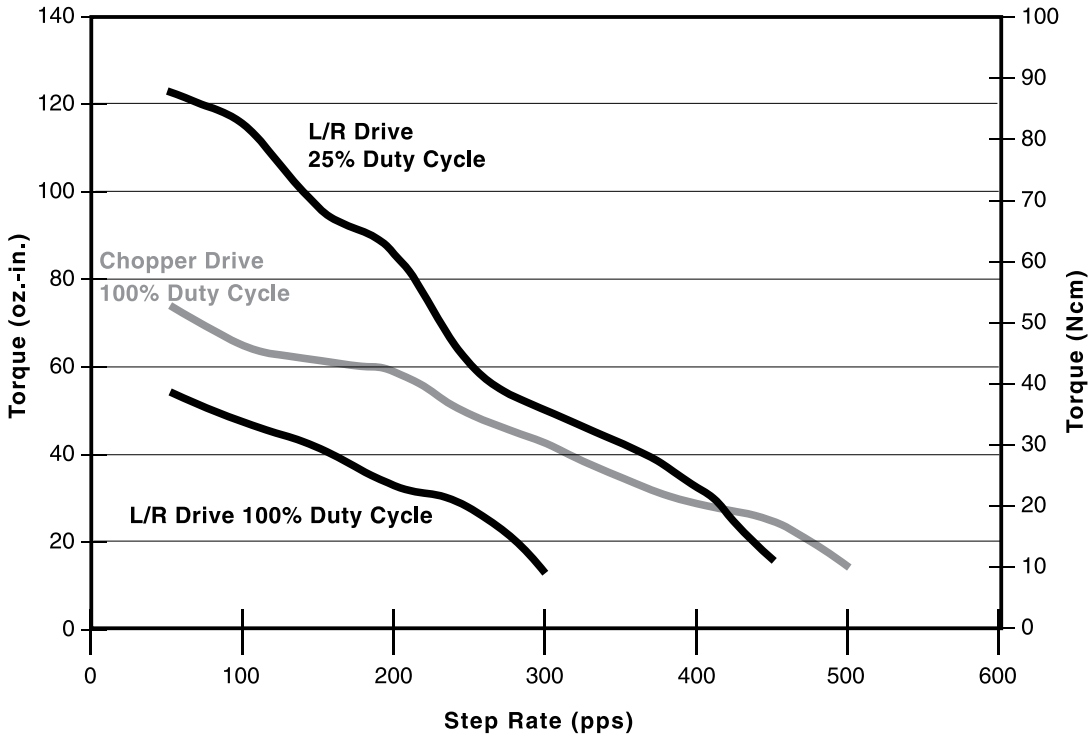

NOTE: Ramping can increase the performance of a motor either by increasing the top speed or getting a heavier load accelerated up to speed faster. Also, deceleration can be used to stop the motor without overshoot.

AC Synchronous Motors

Stepping motors can also be run on AC (Alternating Current). However, one phase must be energized through a properly selected capacitor. In this case the motor is limited to only one synchronous speed. For instance, if 60 hertz is being supplied, there are 120 reversals or alterations of the power source. The phase being energized by a capacitor is also producing the same number of alterations at an offset time sequence. The motor is really being energized at the equivalent of 240 steps per second. For a 15° rotary motor, 24 steps are required to make one revolution (24 SPR). This becomes a 600 RPM synchronous motor.

$$\frac{\text{240 Steps per Revolution x 60 seconds}}{\text{24 Steps per Revolution}} = 600 \text{ RPM}$$

In the case of a linear actuator the linear speed produced is dependent on the resolution per step of the motor. For example if 60 hertz is supplied to a .001-in/step motor the resulting speed is .240-in per second (240 steps per second times .001-in/step). Many of the Haydon™ stepping motors are available as 300 or 600 RPM AC synchronous motors.

AC Hybrid Linear Actuators

Electrical Data

Series	Size	Watts	AMPS	Capacitor (Mfd) @ 60 Hz	Capacitor (Mfd) @ 50 Hz	Coil Resistance (Ohms) Main Wind.	Coil Resistance (Ohms) Cap. Wind.	Connection Diagram
35000	14	5.7	0.21	15	15	300	300	3
43000	17	6.5	0.27	15	15	104	104	3
57000	23	13.0	0.60	30	40	35	35	3
87000*	34	30.0	2.00	200	200	2.3	2.3	4

* With 12 OHM, 100 watt resistor in series

Diag. 3

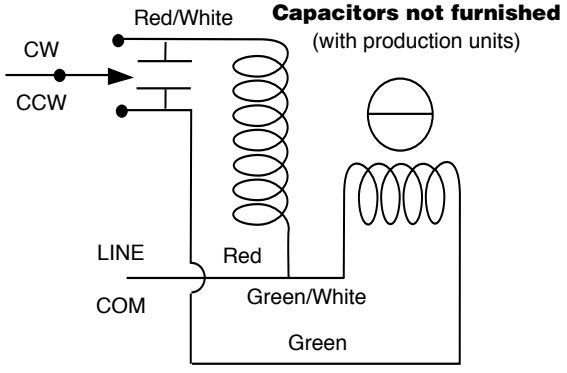

Diag. 4

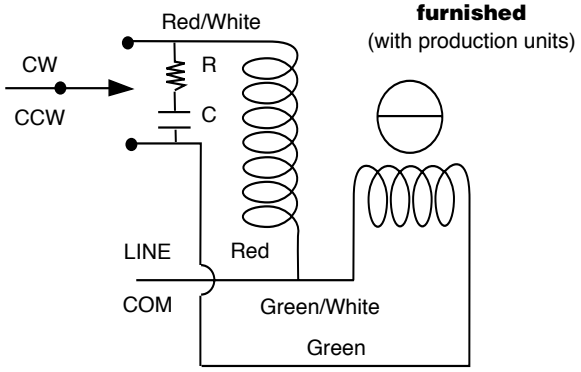

Motor part numbers are for a captive shaft. **For a non-captive shaft**, change the middle letter from an "**H**" to an "**F**". Example 1: A35**H**47-24 with a non-captive shaft becomes A35**F**47-24.
Exception: A43**K**4U-24 and A43**K**4V-24, for a non-captive shaft substitute "**J**" in place of the "**K**".
Example 2: A43**K**4U-24 with a non-captive shaft becomes A43**J**4U-24.

For an external linear shaft, add the three digit suffix - 800 to the captive shaft part number.
Example 3: A35H47-24 with an external linear shaft becomes A35H47-24-**800**.

All standard motors operate at 24 Volts, represented in the part number by the suffix - 24 (A35H47-**24**).

AC Can-Stack Linear Actuators

For electrical data refer to the Rotary Motor Chart below.

Motor Part No.	Linear Speed @ 60 Hz (inches/sec.)	Linear Speed @ 60 Hz (cm/sec.)	Linear Speed @ 50 Hz (inches/sec.)	Linear Speed @ 50 Hz (cm/sec.)	Maximum Force (lbs.)	Maximum Force (Newtons)
Z20541-24-700	0.24	0.610	0.20	0.508	5.5	24
Z20542-24-700	0.48	1.219	0.40	1.016	3.0	13
Z20544-24-700	0.96	2.438	0.80	2.032	1.8	8
A26443-24	0.12	0.305	0.10	0.254	7.4	33
A26441-24	0.24	0.610	0.20	0.508	4.4	20
A26542-24	0.48	1.219	0.40	1.016	3.5	16
A26544-24	0.96	2.438	0.80	2.032	2.0	9
Z26443-24-700	0.12	0.305	0.10	0.254	13.0	58
Z26441-24-700	0.24	0.610	0.20	0.508	8.3	37
Z26542-24-700	0.48	1.219	0.40	1.016	6.6	29
Z26544-24-700	0.96	2.438	0.80	2.032	3.3	15
A36443-24 **	0.12	0.305	0.10	0.254	16.0	71
A36441-24 **	0.24	0.610	0.20	0.508	12.0	53
A36442-24 **	0.48	1.219	0.40	1.016	6.0	27
A36544-24 **	0.96	2.438	0.80	2.032	3.0	13
A46443-24 **	0.12	0.305	0.10	0.254	43	191
A46441-24 **	0.24	0.610	0.20	0.508	34	151
A46442-24 **	0.48	1.219	0.40	1.016	20	89
A46544-24 **	0.96	2.438	0.80	2.032	11	49
A46548-24 **	1.92	4.877	1.60	4.064	5.4	24
A4654G-24 **	3.84	9.754	3.20	8.128	2.7	12

** Select motors available with 24 Volts or 120 Volts (replace 24 with 120).

Motor part numbers are for a captive shaft. **For a non-captive shaft**, change the third digit from a "**4**" to an "**3**".
Example 1: A26**4**41-24 with a non-captive shaft becomes A26**3**41-24.
Exception: When the third digit is "**5**" for a non-captive shaft substitute "**8**". Example 2: A26**5**44-24 with a non-captive shaft becomes A26**8**44-24.

For an external linear shaft, add the three digit suffix - 800 to the captive shaft part number.
Example 3: A26441-24 with an external linear shaft becomes A26441-24**-800**.

All standard motors operate at 24 Volts, represented in the part number by the suffix - 24 (A36443**-24**).

AC Rotary Motors

Motor Part No.	Rotary Speed (RPMs) @ 60 Hz	Rotary Speed (RPMs) @ 50 Hz	Torque (oz-in)	Torque (N-cm)	Watts	Amps	Capacitor @ 60 Hz	Capacitor @ 50 Hz	Connection Diagram	Coil Resistance (Ohms) Main Wind.	Coil Resistance (Ohms) Cap. Wind.
Z20540-24-700	600	500	0.5	0.4	2.5	.15	12.5	12.5	2	300	75
A26440-24	300	250	0.9	0.6	3.4	.20	15.0	15.0	2	214	54
A26540-24	600	500	0.9	0.6	3.4	.20	15.0	20.0	2	214	54
Z26440-24-700	300	250	1.2	0.8	3.4	.19	15.0	15.0	2	214	54
Z26540-24-700	600	500	1.5	1.1	3.4	.19	15.0	15.0	2	214	54
A36240-24	150	125	2.5	1.8	4.6	.23	20.0	20.0	2	160	40
A36440-24	300	250	2.6	1.8	4.6	.23	20.0	20.0	2	160	40
A36540-24	600	500	1.3	0.9	4.6	.23	20.0	20.0	2	160	40
A46440-24	300	250	8.5	6.0	10.0	.38	20.0	20.0	1	29	29
A46540-24	600	500	6.5	4.6	10.0	.38	20.0	25.0	1	58	58
A36240-120	150	125	2.5	1.8	4.6	.05	0.8	0.8	2	4000	1000
A36440-120	300	250	2.6	1.8	4.6	.05	0.8	0.8	2	4000	1000
A36540-120	600	500	1.3	0.9	4.6	.05	0.8	0.8	2	4000	1000
A46440-120	300	250	8.5	6.0	10.0	.08	0.8	0.8	1	725	725
A46540-120	600	500	6.5	4.6	10.0	.08	0.8	1.0	1	1450	1450

Diag. 1

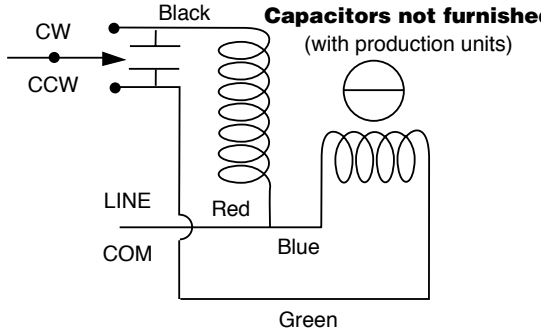

Capacitors not furnished
(with production units)

Diag. 2

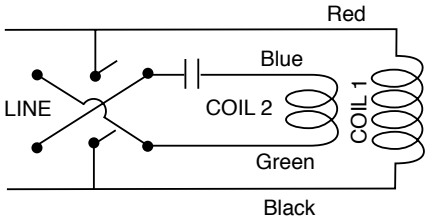

Haydon Kerk Motion Solutions, Inc. has designed an advanced series of drivers to efficiently operate motors to their peak performance. With several options to select from, we can help you set up a system that will power-up any application.

Micro Stepping Drives #DCM8028 & DCM8055

Haydon Kerk Motion Solutions High Performance Micro Stepping Chopper Drives based on some of the most advanced technology in the world today. Providing a cost effective solution for production volume requirements, the small size allows designers to use these Drives in limited space and they are also easily integrated with other electronic systems. Design time is reduced because incorporating these Drives is far simpler than developing a custom drive circuit. They are suitable for driving 2-phase step motors (maximum current ratings of 2.8 A and 5.5 A rms per phase). These specially designed Drives deliver optimum performance throughout a greater speed range. By using an advanced bipolar constant-current chopping technique, and a maximum input voltage of 80 VDC, they can produce more speed and power from the same motor, compared with traditional technologies such as L/R drives.

The DCM8028 and DCM8055 feature high performance, low cost, compact size, mixed decay current control for less motor heating, automatic idle-current reduction and micro step resolutions from 1/2 step to 1/256. There are fourteen micro step resolutions selectable in decimal and binary. The output current levels and micro step resolutions are easily set via the 8 bit DIP switch. These Drives are suitable for 4, 6, and 8 lead motors.

Ideal for a wide range of stepping motors such as low voltage linear motors, used in various kinds of machines, such as X-Y tables, labeling machines, laser cutters, engraving machines, and pick-place devices. These Drives are particularly useful in motor applications requiring low noise, low vibration, high speed and high precision requirements.

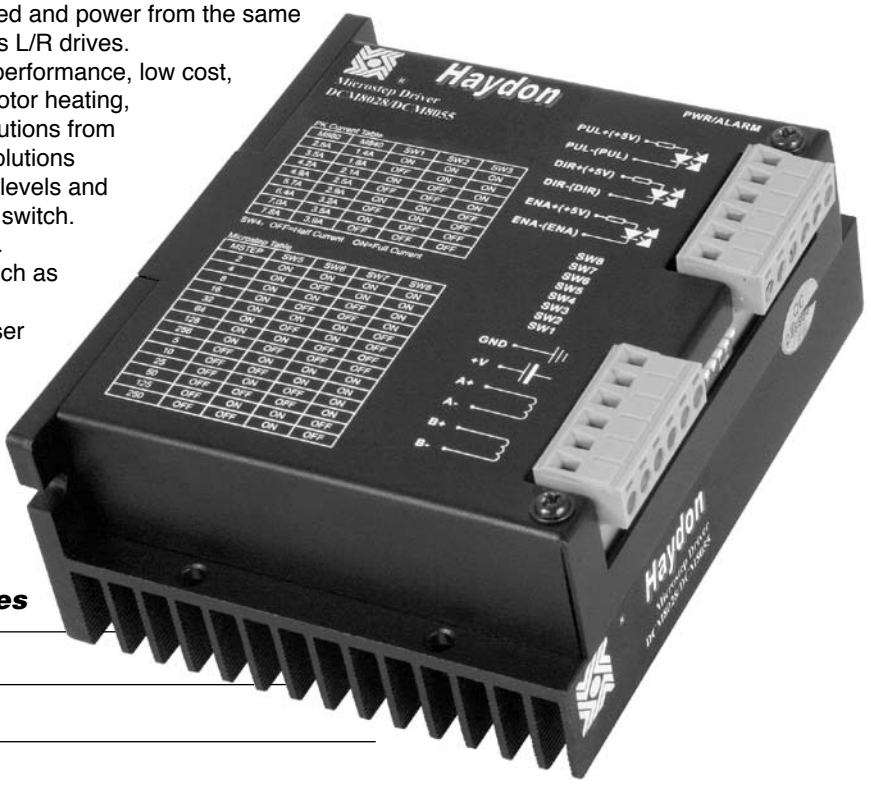

Drive DCM8028/DCM8055 Drive Features

- User friendly Chopper Drive
- Ideal for a wide range of stepping motors
- Suitable for 4, 6, 8 lead motors
- Inaudible 20 khz chopping frequency
- TTL compatible and optically isolated input signals
- 14 selectable microstep resolutions in decimal and binary
- Current up to 5.5 A rms/phase
- Automatic idle current reduction
- 4 5/16" x 4" x 1 1/8" (11.0 cm x 10.2 cm x 2.9 cm)
- Up to 80 VDC input voltage. For Europe the maximum input voltage must be limited to 70 VDC (CE Regulations)

Bipolar Chopper Drive #DCS4020

The Haydon™ DCS4020 Chopper Drive by Haydon Kerk Motion Solutions, Inc. delivers optimum performance throughout a greater speed range. This new technology drive has been designed for easy set up and use. The Haydon DCS4020 is ideal for development projects where a single power supply is all that is necessary to easily run the motor. The motor current is set using an on-board potentiometer and no external current setting resistors are required.

The DCS4020 is also feature-packed. The Driver provides all the basic motor controls including full or half-stepping of bipolar steppers, directional control, and output enable control. An oscillator circuit is standard on the drive with an on-board speed control potentiometer. In addition, external input/output signals allow complete remote control of all drive functions. All electrical connectors have removable plugs incorporating screw type terminals.

Bipolar Chopper Drive #DCS4020 Features

- On-board or external step pulse clock
- On-board or external single step switch
- On-board or external step rate control potentiometer
- On-board or external direction control
- On-board or external full step / half step control
- On-board or external outputs enable control
- On-board current control potentiometer

Bipolar Chopper Drive #DCS4020 Technical Data

Size:	4.47-in x 3.38-in x 1.31-in (113.54 mm x 85.85 mm x 33.27 mm)
Power Requirement:	Single unregulated, providing +20 VDC to +40 VDC
Output Current:	Fully adjustable from 66 mA rms/Ø to 2 A rms/Ø continuous duty
Continuous rating:	2 A rms/Ø
Peak, non-repetitive rating:	3 A/Ø
Chopper Frequency:	~20 Khz
Onboard Oscillating Range:	<10 pulses/sec. to >2,000 pulses/sec.
Stepping:	Full step/Half step capability
I.C.s:	**S.T. Micro: L297** (control I.C.) and **L298** (4A dual full wave bridge)

Bipolar Chopper Drive #40105

A chopper drive is a power-efficient method of current driving a stepping motor to obtain higher stepping rates. Torque, likewise, is maintained which otherwise would have diminished due to the effects of counter E.M.F. and increased coil impedance.

Haydon Kerk Motion Solutions, Inc. bipolar chopper drive (Part No. 40105) has been designed for easy set-up and use. Just connect a single power supply and a motor and its ready to run! Motor current is set using an on-board potentiometer. No external current setting resistors are required. This feature-packed drive provides all basic motor controls, including full or half stepping of bipolar steppers and direction control. An oscillator circuit is standard on the drive with an on-board speed control potentiometer. In addition, external input/output signals allow complete remote control of all drive functions.

The average input power rating of the motor must be adhered to, otherwise overheating will result. It is permissible to operate at 2X rated current (4X power) utilizing a 25% duty cycle.

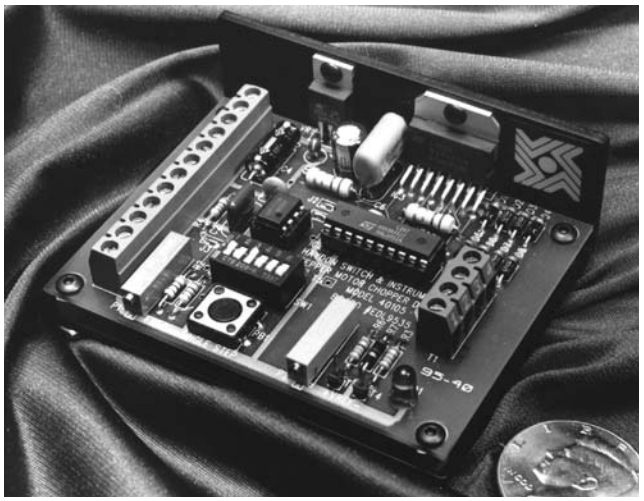

Chopper Drive #40105 Features

- On board or external step pulse clock
- On board or external single step switch
- On board or external step rate control potentiometer
- On board or external direction control
- On board or external full step/half step control
- On board or external outputs enable control
- On board output current control potentiometer
- External reset control
- External chopper synchronous output

Chopper Drive #40105 Technical Data

Size:	3.75-in x 2.95-in x 1.5-in (95.3 mm x 74.9 mm x 38.1 mm)
Power Requirement:	Single unregulated, providing +20 VDC to +40 VDC
Output Current:	Fully adjustable from 66 mA rms/Ø to 3 A rms/Ø
Continuous rating:	2 A rms/Ø
Peak, non-repetitive rating:	3 A/Ø
Chopper Frequency:	~20 Khz
Onboard Oscillating Range:	<10 pulses/sec. to >2,000 pulses/sec.
Stepping:	Full step/Half step capability

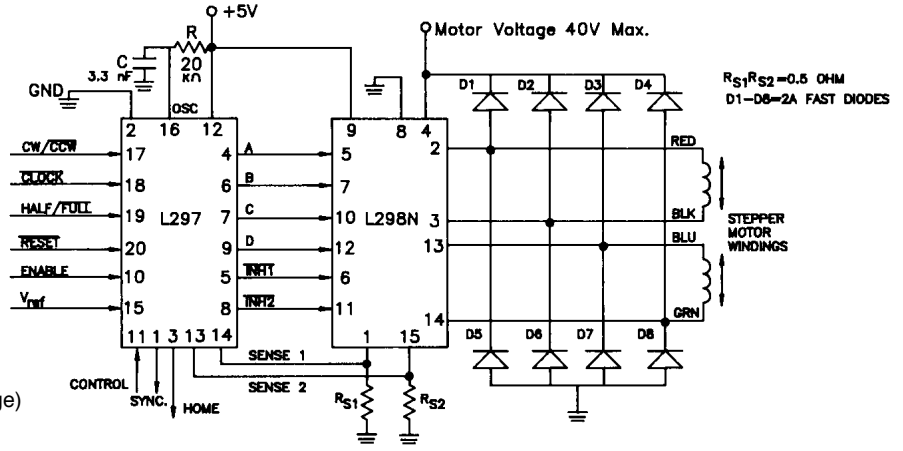

I.C.s:
S.T. Micro: L297 (control I.C.)
and **L298** (4A dual full wave bridge)

Whisper™ Drive #44103

A compact, microstepping drive for bipolar stepper motors that provides a cost effective solution for production volumes. Its ease of integration and small physical size allows for quick integration into your design.

The Whisper incorporates micro-stepping technology, a controller and runs off a single power supply. With eight microsteps per full step, the Whisper can smooth out cogging often associated with Can-stack steppers. The drive has a mixed current decay mode for reduced resonance and improved microstepping. Microstepping also reduces audible noise in the motor.

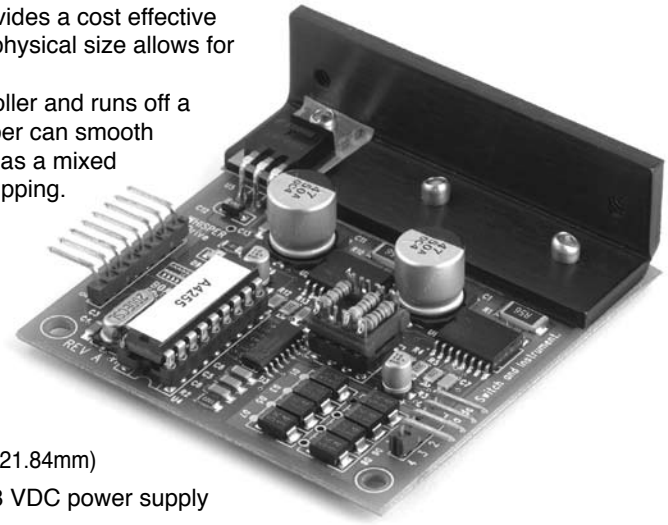

Whisper Drive #44103 Technical Data

Size (approx.):	2.65-in x 2.55-in x .86-in (67.31mm x 64.77mm x 21.84mm)
Power Requirement:	Regulated, 24 VDC to 28 VDC power supply
Output Current:	Up to 1 A rms/Ø
Recommended Motor Coil Voltage:	Bipolar, 5 VDC
Required External Step Pulse Range:	Up to 8000 PPS for 1000 full steps/sec.
Stepping:	Up to 8 microsteps per full step

Whisper Drive #44103 Features

- Bipolar chopper/constant current technology
- Automatic mixed current decay
- Selectable step; Full, 1/2, 1/4, 1/8 step
- Use single power supply for motor and drive
- Output enable/disable control
- Physically compact

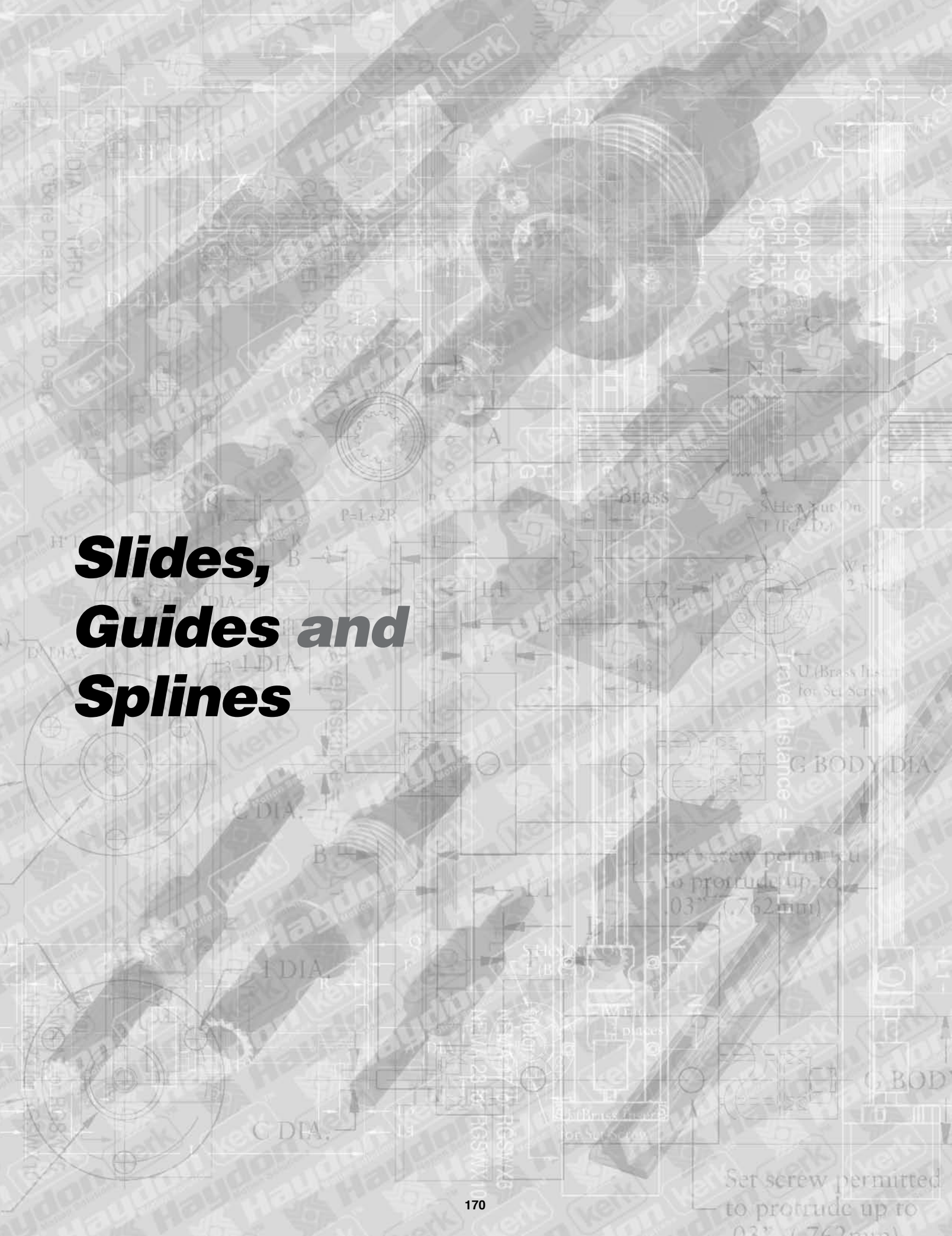

Slides, Guides and Splines

Kerk® Rapid Guide Screw Linear Slides

The **Kerk® RGS® Rapid Guide Screw** is a screw-driven slide that offers exceptional linear speed, accurate positioning, and long life in a compact, value-priced assembly. The length and speed of the RGS is not limited by critical screw speed, allowing high RPM and linear speeds, even over long spans.

Standard leads include .100-in, .200-in, .500-in and 1.00-in (2.54, 5.08, 12.7 and 25.4 mm) travel per revolution. Many optional leads, both inch and metric based, offer everything from high efficiency to non-backdriving leads for vertical applications, eliminating the need for brakes. With Haydon Kerk Motion Solutions, Inc. wide range of available leads, speeds of more than 60 inches per second (1.5 meters per second) are possible, rivaling belts and cables while offering superior positioning accuracy, repeatability and axial stiffness.

The Kerk RGS slide includes a precision aluminum guide and carriage and is driven by a precision rolled stainless steel lead screw. The moving surfaces include Kerkite® high performance polymers running on Kerkote® TFE coating.

The RGS slide has a unique, compact profile that provides exceptional torsional stiffness and stability for its size and weight. The integral mounting base allows support over the entire length if desired. Lengths up to 8 feet (2.4 meters) can readily be built, and longer lengths are possible on a special order basis.

RGS slides come standard with a wear-compensating, anti-backlash driven carriage. Additional driven or passive carriages can be added, along with application specific customization. Linear guides, without the drive screw, are also available.

Standard
Kerk RGS

Haydon™ MotoRGS™ linear slide
integrated with Size 17 stepper motor
linear actuator.

Identifying the part number codes when ordering Rapid Guide Screw Slides

RG	W	06	K	R	–	M	43	–	0100	–	12	–	XXX

Prefix: RG = Rapid Guide Screw

Frame Style
S = Standard
W = Wide sensor mount capability

Frame Size: Load
04 = 15 lbs (not available with W (wide) Frame Style)
06 = 35 lbs
08 = 50 lbs
10 = 100 lbs

Coating
K = Kerkote®
X = Special (ex: Kerkote with grease)

Thread
R = Right hand
L = Left hand
N = No screw

Drive/ Mounting
A = None
B = No motor, in-line motor mount
M = Motorized

Motor Frame
00 = No motor
43 = Size 17 Stepper Motor

Nominal Thread Lead Code (inches)
Code numbers in Part Number Selector Chart

Stroke (in inches rounded up)
07 = 7-in
08 = 8-in
12 = 12-in
(up to 40-in max.)

Unique Identifier
Number assigned by Haydon Kerk Motion Solutions *(for added features such as custom configurations, etc.)*

EXAMPLE:

RGW06KR-M43-0100-12-xxx = RGS®, wide frame style for sensor mounting, for 35 lb load, leadscrew with Kerkote® TFE coating, right hand thread, motorized with Size 17 stepper motor, 0.1-in (2.54 mm) leadscrew diam., 12-in stroke with no added features.

For assistance or order entry, call the Haydon Kerk Motion Solutions Rapid Guide Screw technical advisors at 603.465.7227. Other systems and styles may be available. Visit www.HaydonKerk.com for recent updates.

RGS Linear Slide: Standard Series

Rapid Guide Screw	A inch (mm)	B inch (mm)	C inch (mm)	D inch (mm)	D1 inch (mm)	E inch (mm)	F inch (mm)	G inch (mm)	H inch (mm)	I	K inch (mm)	L1 inch (mm)	L2 inch (mm)	N inch (mm)
RGS 04	.40 (10.2)	.83 (21.1)	.1250 (3.175)	.75 (19.1)	.750 (19.1)	.53 (13.5)	1.4 (36)	1.000 (25.40)	.500 (12.7)	4-40 UNC	.6 (15)	.53 (13.5)	.47 (11.9)	.375 (9.53)
RGS 06	.60 (15.2)	1.25 (31.8)	.1875 (4.762)	1.13 (28.6)	1.125 (28.6)	.79 (20.1)	2.0 (51)	1.500 (38.10)	.750 (19.1)	6-32 UNC	.9 (23)	.80 (20.3)	.80 (20.3)	.500 (12.70)
RGS 08	.80 (20.3)	1.50 (38.1)	.2500 (6.350)	1.60 (40.6)	1.60 (40.6)	1.06 (26.9)	2.7 (69)	1.750 (44.45)	1.000 (25.4)	10-24 UNC	1.3 (33)	1.09 (27.7)	.77 (19.6)	.625 (15.88)
RGS 10	1.00 (25.4)	1.75 (44.5)	.3125 (7.938)	2.00 (50.8)	2.000 (50.8)	1.32 (33.5)	3.3 (83)	2.250 (57.15)	1.250 (31.8)	1/4-20 UNC	1.6 (41)	1.30 (33.0)	1.30 (33.0)	.750 (19.05)

Rapid Guide Screw	P inch (mm)	Q inch (mm)	R inch (mm)	S inch (mm)	T inch (mm)	U inch (mm)	V inch (mm)	W	X inch (mm)	Y inch (mm)	Z1 inch (mm)	Z2 inch (mm)	Z3 inch (mm)
RGS 04	.600 (15.24)	.50 (12.7)	.52 (13.2)	.37 (9.4)	.15 (3.8)	.23 (5.8)	.73 (18.5)	4-40 SHCS	.38 (9.7)	.115 (2.92)	.11 (2.8)	.20 (5.1)	.09 (2.3)
RGS 06	.900 (22.86)	.74 (18.8)	.80 (20.3)	.55 (14.0)	.22 (5.6)	.35 (8.9)	1.10 (27.9)	6-32 SHCS	.50 (12.7)	.170 (4.32)	.14 (3.6)	.25 (6.4)	.13 (3.3)
RGS 08	1.250 (31.75)	1.00 (25.4)	1.04 (26.4)	.74 (18.8)	.30 (7.6)	.51 (13.0)	1.47 (37.3)	10-24 SHCS	.70 (17.8)	.220 (5.59)	.20 (5.1)	.33 (8.4)	.19 (4.8)
RGS 10	1.500 (38.10)	1.25 (31.8)	1.30 (33.0)	.92 (23.4)	.375 (9.5)	.64 (16.3)	1.83 (46.5)	1/4-20 SHCS	.88 (22.4)	.280 (7.11)	.26 (6.6)	.50 (12.7)	.22 (5.6)

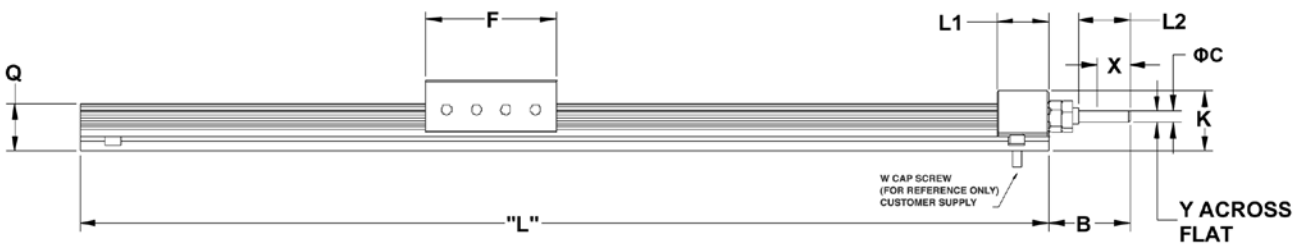

RGS Linear Slide: Standard Series

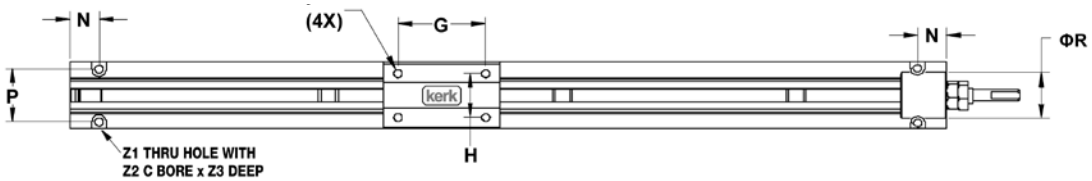

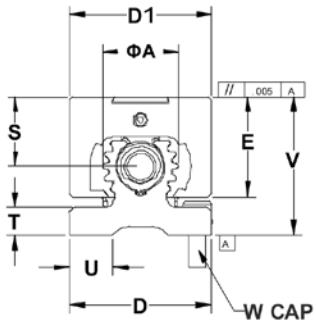

W CAP SCREW
(FOR REFERENCE ONLY)
CUSTOMER SUPPLY

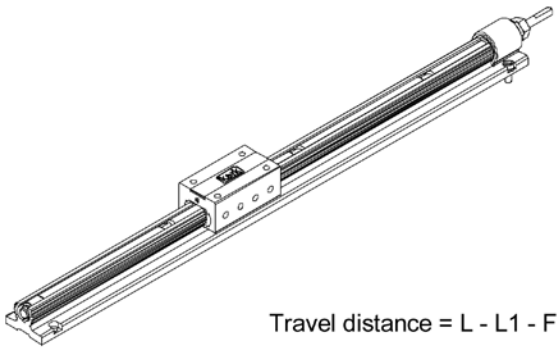

Travel distance = L - L1 - F

Rapid Guide Screw	Inch Lead inch (mm)	Thread Lead Code	Nominal Rail Diam. inch (mm)	Nominal Screw Diam. inch (mm)	Typical Drag Torque oz - in (NM)	Life @ 1/4 Design Load inch (cm)	Torque-to-Move Lead oz-in/lb (NM/Kg)	Design Load lbs (Kg)	Screw Inertia oz-in sec^2/in (KgM^2/M)
RGS 04	.100 (2.54)	0100	0.4 (10.2)	1/4" (6.4)	3.0 (.02)	100,000,000 (254,000,000)	1.0 (.016)	15 (7)	.3 x 10^{-5} (6.5 x 10^{-6})
RGS 04	.200 (5.08)	0200	0.4 (10.2)	1/4" (6.4)	4.0 (.03)	100,000,000 (254,000,000)	1.5 (.023)	15 (7)	.3 x 10^{-5} (6.5 x 10)
RGS 04	.500 (12.70)	0500	0.4 (10.2)	1/4" (6.4)	5.0 (.04)	100,000,000 (254,000,000)	2.5 (.039)	15 (7)	.3 x 10^{-5} (6.5 x 10^{-6})
RGS 04	1.000 (25.40)	1000	0.4 (10.2)	1/4" (6.4)	6.0 (.04)	100,000,000 (254,000,000)	4.5 (.070)	15 (7)	.3 x 10^{-5} (6.5 x 10^{-6})
RGS 06	.100 (2.54)	0100	0.6 (15.2)	3/8" (9.5)	4.0 (.03)	100,000,000 (254,000,000)	1.0 (.016)	35 (16)	1.5 x 10^{-5} (4.2 x 10^{-6})
RGS 06	.200 (5.08)	0200	0.6 (15.2)	3/8" (9.5)	5.0 (.04)	100,000,000 (254,000,000)	1.5 (.023)	35 (16)	1.5 x 10^{-5} (4.2 x 10^{-6})
RGS 06	.500 (12.70)	0500	0.6 (15.2)	3/8" (9.5)	6.0 (.04)	100,000,000 (254,000,000)	2.5 (.039)	35 (16)	1.5 x 10^{-5} (4.2 x 10^{-6})
RGS 06	1.000 (25.40)	1000	0.6 (15.2)	3/8" (9.5)	7.0 (.05)	100,000,000 (254,000,000)	4.5 (.070)	35 (16)	1.5 x 10^{-5} (4.2 x 10^{-6})
RGS 08	.100 (.254)	0100	0.8 (20.3)	1/2" (12.7)	5.0 (.04)	100,000,000 (254,000,000)	1.1 (.018)	50 (22)	5.2 x 10^{-5} (20.0 x 10^{-6})
RGS 08	.200 (5.08)	0200	0.8 (20.3)	1/2" (12.7)	6.0 (.04)	100,000,000 (254,000,000)	1.7 (.027)	50 (22)	5.2 x 10^{-5} (20.0 x 10^{-6})
RGS 08	.500 (12.70)	0500	0.8 (20.3)	1/2" (12.7)	7.0 (.05)	100,000,000 (254,000,000)	3.0 (.047)	50 (22)	5.2 x 10^{-5} (20.0 x 10^{-6})
RGS 08	1.000 (25.40)	1000	0.8 (20.3)	1/2" (12.7)	8.0 (.06)	100,000,000 (254,000,000)	6.0 (.096)	50 (22)	5.2 x 10^{-5} (20.0 x 10^{-6})
RGS 10	.100 (2.54)	0100	1.0 (25.4)	5/8" (15.9)	5.0 (.04)	100,000,000 (254,000,000)	1.3 (.020)	100 (46)	14.2 x 10^{-5} (3.9 x 10^{-5})
RGS 10	.200 (5.08)	0200	1.0 (25.4)	5/8 (15.9)	6.5 (.05)	100,000,000 (254,000,000)	2.0 (.031)	100 (46)	14.2 x 10^{-5} (3.9 x 10^{-5})
RGS 10	.500 (12.70)	0500	1.0 (25.4)	5/8 (15.9)	7.0 (.05)	100,000,000 (254,000,000)	3.0 (.047)	100 (46)	14.2 x 10^{-5} (3.9 x 10^{-5})
RGS 10	1.000 (25.40)	1000	1.0 (25.4)	5/8 (15.9)	8.5 (.06)	100,000,000 (254,000,000)	6.5 (.101)	100 (46)	14.2 x 10^{-5} (3.9 x 10^{-5})

*RGS® assemblies with lengths over 3 feet and/or leads higher than .5-in will likely have higher drag torque than listed values.

Kerk® RGW Linear Slide Series and RGM Motor Mount

– wider style with mounting slots and brackets

The RGW Series configurations of the Rapid Guide Screw Linear Slide simplify motor and limit switch sensor mounting. Both versions include slots for sensor brackets and mounting provisions for a flag on the carriage, while the RGM Motor Mount series also includes a bracket for motor mounting. The motor, coupling and sensors are not provided, but a sensor mounting kit for a common optical sensor is available from Haydon Kerk Motion Solutions, Inc. (see Sensor Mount Kit).

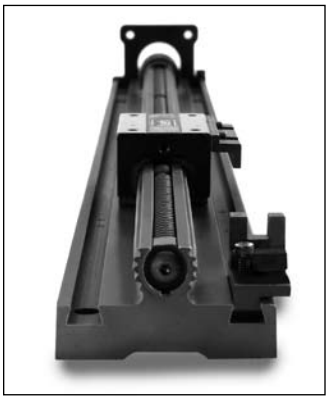

RGW Series

Wide Rapid Guide Screw	A inch (mm)	B inch (mm)	C inch (mm)	D inch (mm)	D1 inch (mm)	F inch (mm)	G inch (mm)	H inch (mm)	I	K inch (mm)	L1 inch (mm)	L2 inch (mm)	N inch (mm)
RGW 06	.60 (15.2)	1.25 (31.8)	.1875 (4.762)	2.00 (50.8)	1.13 (28.6)	2.0 (51)	1.500 (38.10)	.750 (19.05)	6-32 (UNC)	1.2 (30)	.80 (20.3)	.80 (20.3)	.500 (12.70)
RGW 10	1.00 (25.4)	1.75 (44.5)	.3125 (7.938)	3.38 (85.7)	2.00 (50.8)	3.3 (83)	2.250 (57.15)	1.250 (31.75)	1/4-20 (UNC)	1.9 (48)	1.30 (33.0)	1.30 (33.0)	.750 (19.05)

	P inch (mm)	Q inch (mm)	S1 inch (mm)	T inch (mm)	U inch (mm)	V inch (mm)	W	X inch (mm)	Y inch (mm)	Z1 inch (mm)	Z2 inch (mm)	Z3 inch (mm)
RGW 06	1.460 (37.08)	1.04 (26.4)	.83 (21.2)	.51 (13.0)	.63 (16.0)	1.39 (35.3)	6-32 SHCS	.50 (12.7)	.170 (4.32)	.14 (3.7)	.25 (6.4)	.14 (3.6)
RGW 10	2.600 (66.04)	1.56 (39.6)	1.22 (31.0)	.69 (17.5)	1.33 (33.8)	2.15 (54.6)	1/4-20 SHCS	.88 (22.4)	.280 (7.11)	.26 (6.6)	.40 (10.2)	.43 (10.9)

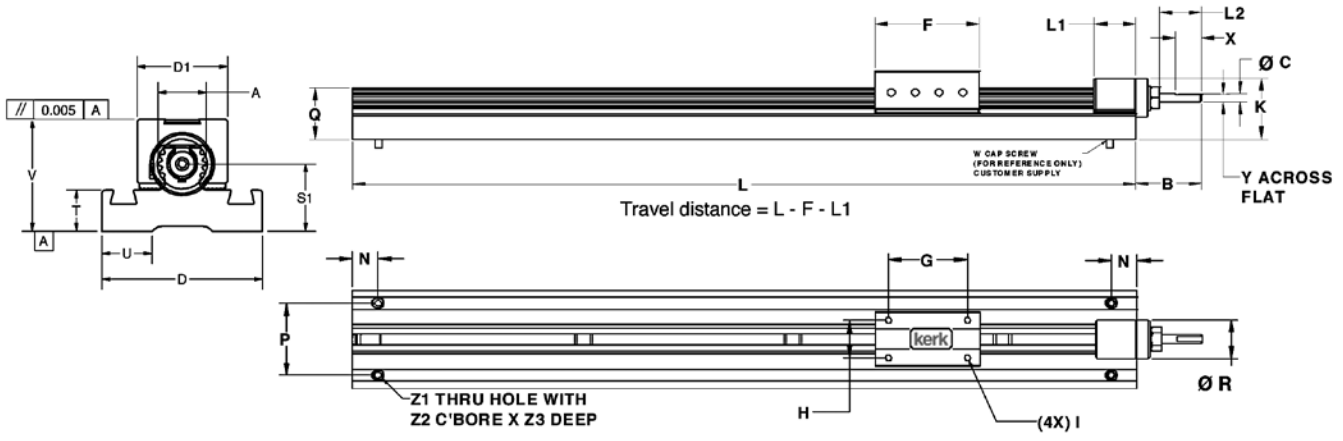

RGM Motor Mount Series

Wide, Motor Mount Rapid Guide Screw	A inch (mm)	D inch (mm)	D1 inch (mm)	D2 inch (mm)	F inch (mm)	G inch (mm)	H inch (mm)	I	J inch (mm)	J1 inch (mm)	J2 inch (mm)	J4 inch (mm)	L1 inch (mm)	L2 inch (mm)
RGM 06	.60 (15.2)	2.00 (50.8)	1.13 (28.6)	1.67 (42.2)	2.0 (51)	1.500 (38.10)	.750 (19.05)	6-32 UNC	.43 (10.9)	.36 (9.2)	.14 (3.5)	1.1 (28)	.80 (20.3)	1.93 (48.9)
RGM 10	1.00 (25.4)	3.38 (85.7)	2.00 (50.8)	2.22 (56.4)	3.3 (83)	2.250 (57.15)	1.250 (31.75)	1/4-20 UNC	.63 (16.0)	.36 (9.2)	NA	1.1 (28)	1.30 (33.0)	2.16 (54.9)

Wide, Motor Mount Rapid Guide Screw	L3 inch (mm)	N inch (mm)	N1 inch (mm)	P inch (mm)	Q inch (mm)	S1 inch (mm)	T inch (mm)	U inch (mm)	V inch (mm)	V1 inch (mm)	Z1 inch (mm)	Z2 inch (mm)	Z3 inch (mm)
RGM 06	.31 (7.9)	.500 (12.70)	1.50 (38.1)	1.460 (37.08)	1.04 (26.4)	.83 (21.2)	.51 (13.0)	.63 (16.0)	1.39 (35.3)	1.67 (42.4)	.14 (3.6)	.25 (6.4)	.14 (3.6)
RGM 10	.50 (12.7)	.750 (19.05)	1.50 (38.1)	2.600 (66.04)	1.56 (39.6)	1.22 (31.0)	.69 (17.5)	1.33 (33.8)	2.15 (54.6)	2.34 (59.3)	.26 (6.6)	.40 (10.2)	.43 (10.9)

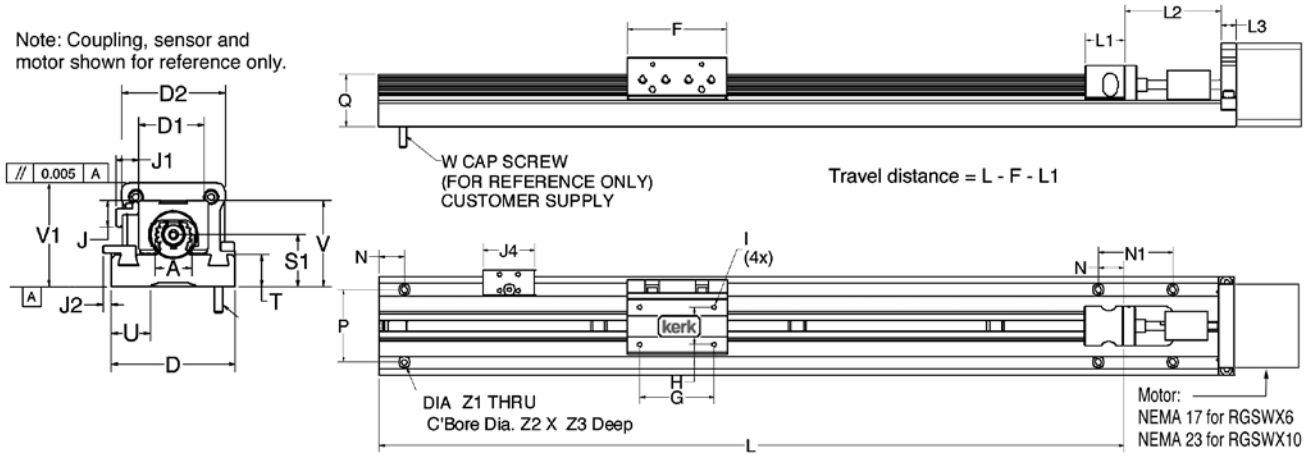

Sensor Mounting Kit

Sensor mounting kits, based on a U-channel optical sensor, are available for the RGSW and RGSWX series. Each kit includes one flag, three sensor mounts, and all mounting hardware. Sensors are not included in the kit and must be ordered separately from sensor manufacturer. One recommended sensor is Sunx part number PM-L24.

Part Numbers: **RGSW06SK** Sensor kit for RGSW6000 or RGSWX6000
RGSW10SK Sensor kit for RGSW10000 or RGSWX10000

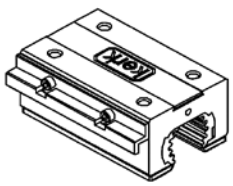

Flag
Mounts to side of carriage

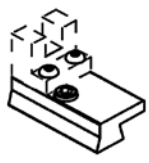

RGSW6 Sensor Mount
Mounts in slot on RGS base

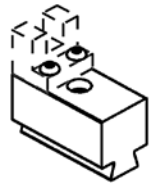

RGSW10 Sensor Mount
Mounts in slot on RGS base

Kerk® RGS® Linear Guide Series

Kerk RGS Linear Guides provide a strong, stable platform for a variety of linear motion applications. The RGS Linear Guide is designed to easily mount to any flat surface, or bridge free spans, with a convenient, easy-access carriage. The splined aluminum profile, with Kerkote® TFE coating, combines low friction linear guidance with torsional stability. The Linear Guides can be configured in lengths up to 8 feet without special tooling, with one or more carriages, in standard or custom configurations. The wide linear guide series features a wider base for even greater stability. Kerk® RGS Linear Guides are constructed of high strength, extruded aluminum and Kerkite® composite polymer with Kerkote TFE on all critical surfaces. This proven combination of materials assures exceptionally long life without the need for adjustment, lubrication or maintenance. The simplicity of the RGS Linear Guide makes it both easy to use and a great value. Similar to other Haydon Kerk Motion Solutions products, it can be easily modified to custom configurations to suit most applications. The Kerk® RGS Linear Guides are perfect companions to the Kerk® RGS series of screw-driven linear slides. All Kerk® RGS Series products share the same rail and carriage geometry and simplify equipment design and reduce part counts, and are equally suitable for use with Kerk® leadscrews or any other type of drive or actuator.

Identifying the part number codes when ordering RGS Linear Guides

RG	S	06	K	N	–	A	00	–	0000	–	12	–	XXX

Prefix: RG
= RG Compatible Linear Guide

Frame Style
S = Standard
W = Wide sensor mount capability

Carriage Guide Width
04 = 0.4-in (10.2)
06 = 0.6-in (15.2)
10 = 1.0-in (25.4)

Coating
K = Kerkote®
X = Custom

Thread
N = No screw

Drive/ Mounting
A = None

Motor Frame
00 = No motor

Screw
0000 = No screw

Stroke (in inches rounded up)
07 = 7-in
08 = 8-in
12 = 12-in
(up to 40-in max.)

Unique Identifier
Number assigned by Haydon Kerk Motion Solutions *(for added features such as custom configurations, etc.)*

EXAMPLE:

RGS06KN-A00-0000-12-xxx = Linear Guide, standard frame width, rail guide width 0.6-in, Kerkote® TFE coated surface areas, 12-in stroke with no added features.

For assistance or order entry, call the Haydon Kerk Motion Solutions Linear Guide technical advisors at 603.465.7227. Other systems and styles may be available. Visit www.HaydonKerk.com for recent updates.

RGS® Linear Guide

RGS Linear Guide: Standard Series

Linear Guide	A inch (mm)	D inch (mm)	D1 inch (mm)	E inch (mm)	F inch (mm)	G inch (mm)	H inch (mm)	I	N inch (mm)	P inch (mm)	Q inch (mm)	S inch (mm)	T inch (mm)	U inch (mm)	V inch (mm)	W	Z1 inch (mm)	Z2 inch (mm)	Z3 inch (mm)
RGS 04	.40 (10.2)	.75 (19.1)	.75 (19.1)	.53 (13.5)	1.4 (36)	1.000 (25.40)	.500 (12.70)	4-40 UNC	.375 (9.53)	.600 (15.24)	.50 (12.7)	.37 (9.4)	.15 (3.8)	.23 (5.8)	.73 (18.5)	4.40 SHCS	.11 (2.8)	.20 (5.1)	.09 (2.3)
RGS 06	.60 (15.2)	1.13 (28.6)	1.13 (28.6)	.79 (200.1)	2.0 (51)	1.500 (38.10)	.750 (19.05)	6-32 UNC	.500 (12.70)	.900 (22.86)	.74 (18.8)	.55 (14.0)	.22 (5.6)	.35 (8.9)	1.10 (27.9)	6-32 SHCS	.14 (3.6)	.25 (6.4)	.13 (3.3)
RGS 10	1.00 (25.4)	2.00 (50.8)	2.00 (50.8)	1.32 (33.5)	3.3 (83)	2.250 (57.15)	1.250 (31.75)	1/4-20 UNC	.750 (19.05)	1.500 (38.10)	1.25 (31.8)	.92 (23.4)	.375 (9.5)	.64 (16.3)	1.83 (46.5)	1/4-20 SHCS	.26 (6.6)	.50 (12.7)	.22 (5.6)

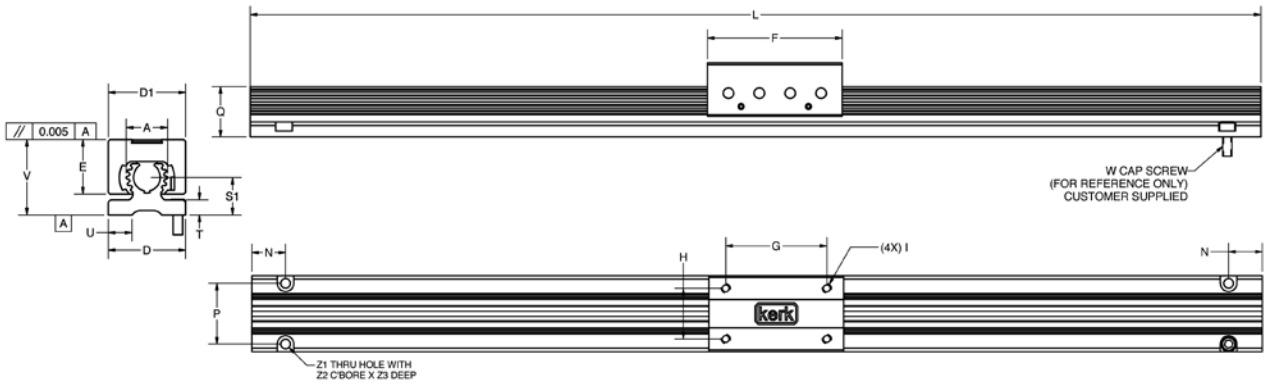

RGW Linear Guide: Wide Series

Linear Guide	A inch (mm)	D inch (mm)	D1 inch (mm)	F inch (mm)	G inch (mm)	H inch (mm)	I	N inch (mm)	P inch (mm)	Q inch (mm)	S1 inch (mm)	T inch (mm)	U inch (mm)	V inch (mm)	W	Z1 inch (mm)	Z2 inch (mm)	Z3 inch (mm)
RGW 06	.60 (15.2)	2.00 (50.8)	1.13 (28.6)	2.0 (51)	1.500 (38.10)	.750 (19.05)	6-32 UNC	.500 (12.70)	1.460 (37.08)	1.04 (26.4)	.83 (21.2)	.51 (13.0)	.63 (16.0)	1.39 (35.3)	6-32 SHCS	.14 (3.6)	.25 (6.4)	.14 (3.6)
RGW 10	1.00 (25.4)	3.38 (85.7)	2.00 (50.8)	3.3 (83)	2.250 (57.15)	1.250 (31.75)	1/4-20 UNC	.750 (19.05)	2.600 (66.04)	1.56 (39.6)	1.22 (31)	.69 (17.5)	1.33 (33.8)	2.15 (54.6)	1/4-20 SHCS	.26 (6.6)	.40 (10.2)	.43 (10.9)

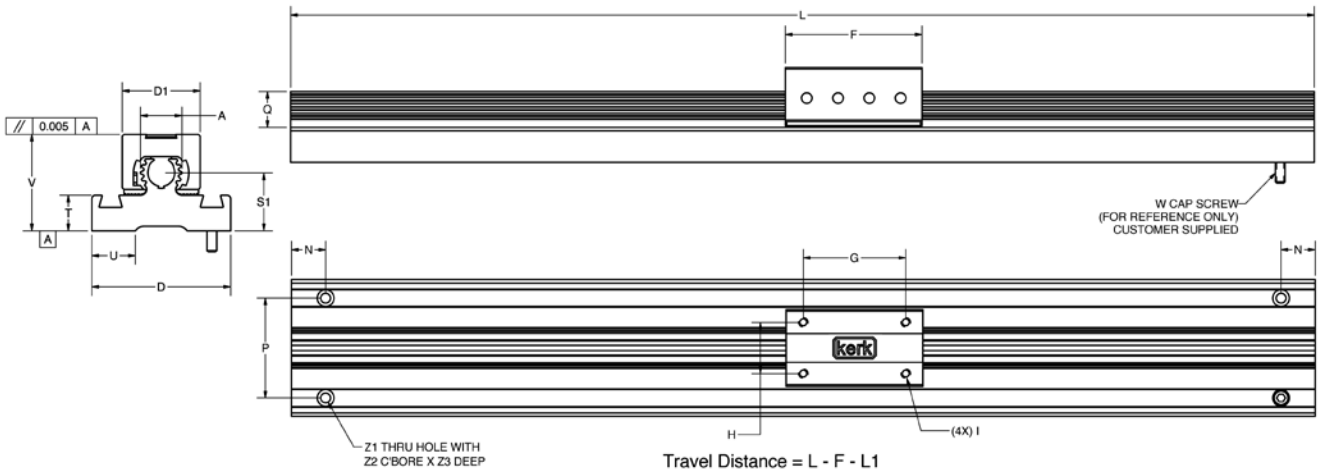

Travel Distance = L - F - L1

Haydon™ LRS™ – Linear Rail Systems slide technology

Haydon Linear Rail Systems (LRS) use a precision leadscrew assembly mechanism to provide controlled positioning along the axis of a robust aluminum linear slide. The LRS consists of a stationary base with a load bearing carriage that travels along a custom-extruded aluminum rail of varying lengths. The carriage is a small platform with sliding element linear bearings that glide within this specially configured extrusion. The leadscrew used in the system is provided with various leads and shaft end configurations that accommodate virtually any source of rotary power.

Key Product Features

- "T" slots integrated into exterior rail bottom and sides that accommodate full length support and various mounting options.
- Loads easily attach to the compact, moving carriage with four or six M4 x 0.7 size screws.
- Load bearing carriage moves efficiently and smoothly within the internal rail geometry of this specially designed aluminum extrusion.
- Rail provides end-to-end axial stability and precise motion system accuracy.
- Automatic adjustments of slide bearing play with a patent pending "anti-backlash" linear bearing.
- Rated life equals that of the existing leadscrews of similar size.
- Leadscrew end configurations adapt to various rotary motion sources.
- Kerkote® or Black Ice™ TFE coatings on a 303 stainless steel leadscrew.
- Designed to Metric global engineering standards.
- For extreme control, LRS can be used with CMP or WDG high-precision anti-backlash nuts, as well as a freewheeling general purpose nut.

Performance Specifications

Width	Length of Stroke (max)	Speed (max)	Straight Line Accuracy	Twist
1-5/8-in square (4.3 cm square)	40-in (1000 mm)	20-in/sec (0.5 M/sec)	+/- 0.012-in/ft (+/- 1.0 mm/M)	+/- 0.25°/ft (+/- 0.75°/M)

Load Ratings (max)

Top Load "Z" Direction	Hanging / Gantry	Max. Pitch Moment	Max. Moment Roll	Max. Moment Yaw
50 lbs (225 N)	50 lbs (225 N)	75-in – lbs (8.5 N – M)	75-in – lbs (8.5 N – M)	75-in – lbs (8.5 N – M)

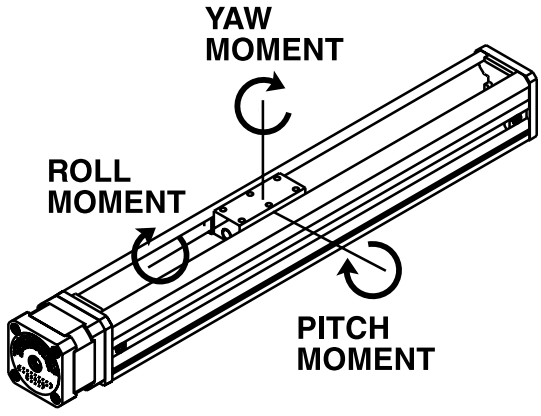

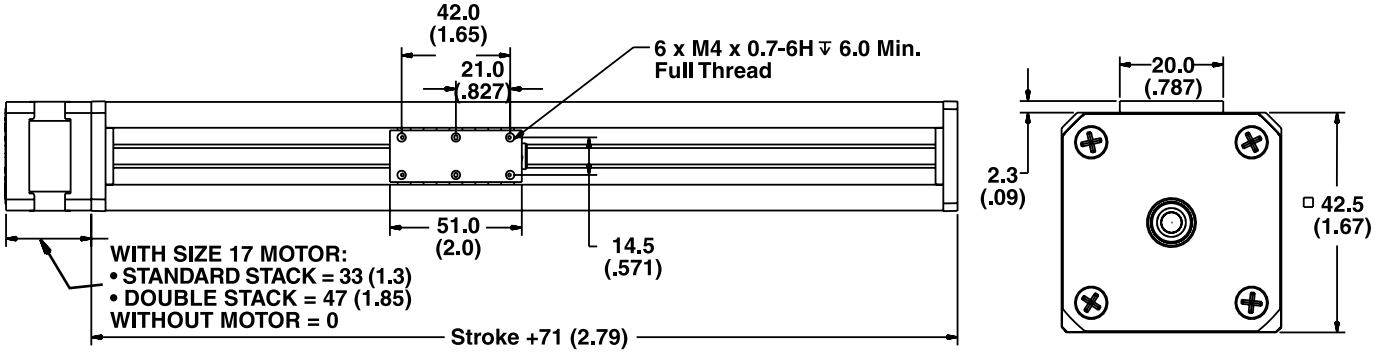

Haydon Kerk Motion Solutions, Inc. • www.HaydonKerk.com • Phone: 800.243.2715 • International: 203.756.7441

Identifying the part number codes when ordering

LR	W	04	B	R	–	M	43	–	0025	–	12	–	XXX

Prefix: LR
= Linear Rail System (LRS)

Nut Style
B = BFW nut
W = WDG nut
G = Guide only

Rail Frame Size: Load
04 = 50 lbs

Coating
S = Uncoated
B = Black Ice™
N = No screw

Thread
R = Right hand
L = Left hand
N = No screw
X = Custom

Drive/ Mounting
A = None
B = No motor, in-line motor mount
M = Motorized

Motor Frame
00 = No motor
43 = Size 17 Stepper Motor
XX = Custom

Nominal Thread Lead Code (in inches)
0000 = No screw
Select from Lead Code Chart

Stroke (in inches rounded up)
07 = 7-in
08 = 8-in
12 = 12-in
(up to 40-in max.)

Unique Identifier
Number assigned by Haydon Kerk Motion Solutions *(for added features such as custom configurations, etc.)*

LRS™ – Linear Rail Systems powered slide technology

For optimum performance, the system can be fitted with the Haydon™ patented, Size 17 Hybrid Linear Actuators available in a wide variety of resolutions - from 0.001524 mm (0.00006-in) per step to 0.048768 mm (0.00192-in) per step, and delivers thrust of up to 222 N (50 lbs.). For greater performance Size 17 Hybrid Double Stack Linear Actuators provide 0.0158 mm (0.000625-in) per step to 0.127 mm (0.005-in) per step and delivers thrust of up to 337 N (75 lbs.).

Lead (inch)	Lead (mm)	Thread Lead Code
0.025	0.635	0025
0.03125	0.794	0031
0.0394	1.0	0039
0.05	1.27	0050
0.0625	1.588	0063
0.0787	2.0	0079
0.1	2.54	0100
0.125	3.175	0125
0.1969	5.0	0197
0.25	6.35	0250
0.3937	10.0	0394
0.5	12.7	0500
0.75	19.05	0750
1.0	25.4	1000

- 42.5 cm (16-5/8 in.) x 4.3 cm (1-5/8 in.) sq., Black Ice™ PTF Leadscrew with Size 17 Hybrid Linear Actuator
- 27.5 cm (10-3/4 in.) x 4.3 cm (1-5/8 in.) sq., Black Ice™ Leadscrew, with Size 17 Double Stack Hybrid Linear Actuator

HOW TO ORDER EXAMPLES:

LRW04BR-M43-0025-12-XXX = Linear Rail System, WDG anti-backlash nut, standard linear rail, Black Ice TFE coated screw, right hand thread, motorized, Size 17 stepper motor, 0.025-in lead, 12-in stroke, with no additional unique feature

LRG04NN-A00-0000-12-XXX = Linear Rail System, guide only, standard linear rail, guide only (no screw), no motor, 12-in stroke, with no additional unique feature

For applications assistance or order entry, call the Haydon Kerk Motion Solutions Linear Rails technical advisors at 203.756.7441.
Other systems may be available.
Visit www.HaydonKerk.com for recent updates.

Kerk® ScrewRail® Linear Actuators

Linear motion has traditionally required separate components to handle both drive and support/guidance. The patented Kerk® ScrewRail® combines both functions in a single, coaxial component. By eliminating the need for external rail-to-screw alignment, the ScrewRail simplifies the design, manufacture and assembly of motion systems. The ScrewRail's coaxial design saves as much as 80% of the space used by a two-rail system and is generally less expensive than the equivalent components purchased separately. The savings can be substantial due to lower component costs and reduced labor. An added benefit is the ability to get three-dimensional motion from a single ScrewRail.

The ScrewRail consists of a precision rolled lead screw, supported by sealed bearings and contained within a concentric steel guide rail, driving an integrated nut/bushing. Because all the alignment requirements are achieved within the ScrewRail, support and positioning of the ScrewRail is much less critical than with traditional slide assemblies. Kerkote® TFE coating and self-lubricating nut/bushing materials ensure long life without maintenance.

When mounted vertically, the ScrewRail can be used to simultaneously lift and rotate (Z-theta motion). With one motor driving the screw and a second rotating the rail, a compact, self-supporting pick and place mechanism can be created.

Z-Theta ScrewRail Assembly

Identifying the part number codes when ordering ScrewRail®

SR	Z	06	K	R	–	A	00	–	0100	–	08	–	XXX

Prefix:
SR = ScrewRail®

Nut Style
A = free-wheeling style nut
Z = Anti-Backlash Nut

Nominal Rail Diam.
03= 3/8-in
04= 1/2-in
06= 3/4-in
08= 1-in

(see SR specifications chart)

Coating
S = Uncoated
K = Kerkote®

Thread
R = Right hand
L = Left hand

Drive/ Mounting
A = Standard
M = Motorized

Motor Frame
00 = No motor
43 = Size 17 Stepper Motor

Nominal Thread Lead Code (inches)
0000 = No screw

Code numbers in ScrewRail® Selector Chart

Stroke (in inches rounded up)
07 = 7-in
08 = 8-in
12 = 12-in

Unique Identifier
Number assigned by Haydon Kerk Motion Solutions *(for added features such as custom configurations, etc.)*

EXAMPLES:

SRZ06KR-A00-0100-08-xxx = ScrewRail® with anti-backlash nut, 3/4-in nominal rail diameter, leadscrew with Kerkote® TFE coating, right hand thread, no motor, 0.1-in (2.54 mm) leadscrew diam., 8-in over all length with no added features.

SRA03SL-A00-0050-07-xxx = ScrewRail® with a conventional (without anti-backlash mechanism) nut, 3/8-in nominal rail diameter, uncoated leadscrew, left hand thread, no motor, 0.05-in (.127 mm) leadscrew diam., 7-in stroke with no added features.

For assistance or order entry, call the Haydon Kerk Motion Solutions ScrewRail technical advisors at 603.465.7227. Other systems and styles may be available. Visit www.HaydonKerk.com for recent updates.

Identifying the part number codes when ordering ScrewRail® End Supports

SR	04	ES	–	Z00

Prefix:
SR = ScrewRail®

Size
04= 1/2-in
06= 3/4-in
08= 1-in

ES = End Support

Identifier = Standard

Kerk® SRA Series General Purpose ScrewRail® Linear Actuators

A standard nut for general applications where anti-backlash compensation is not required.

The SRA is recommended anywhere low drag and minimal free play is required.

Note: Right-hand/Left-hand ScrewRail® assemblies are also available.

ScrewRail®: SRA Series General Purpose

	A Diam. inch (mm)	B inch (mm)	C Diam. inch (mm)	D Diam. inch (mm)	E inch (mm)	F inch (mm)	G Diam. inch (mm)	H(B.C.D.) inch (mm)	I inch (mm)	L1 inch (mm)	L2 inch (mm)
SRA 03	.364/.367 (9.24/9.32)	.38 (9.56)	.1245/.1250 (3.16/3.18)	.98 (24.9)	1.1 (27.94)	.28 (7.2)	.562 (14.3)	.75 (19.1)	.094 (2.39)	.37 (9.4)	.38 (9.66)
SRA 04	.489/.492 (12.42/12.5)	0.62 (15.75)	.1870/.1875 (4.75/4.76)	1.31 (33.3)	1.4 (36)	.38 (9.5)	.750 (19.1)	1.03 (26.2)	0.140 (3.56)	0.26 (6.6)	0.36 (9.1)
SRA 06	.739/.742 (18.77/18.85)	0.75 (19.05)	.2490/.2495 (6.33/6.34)	1.81 (46.0)	2.0 (51)	.50 (12.7)	1.120 (28.4)	1.48 (37.6)	0.173 (4.39)	0.38 (9.7)	0.70 (17.8)
SRA 08	.989/.992 (25.12/25.2)	0.75 (19.05)	.2490/.2495 (6.33/6.34)	2.30 (58.4)	2.5 (64)	.63 (15.9)	1.495 (38.0)	1.92 (48.8)	0.200 (5.08)	0.48 (12.2)	0.77 (19.6)

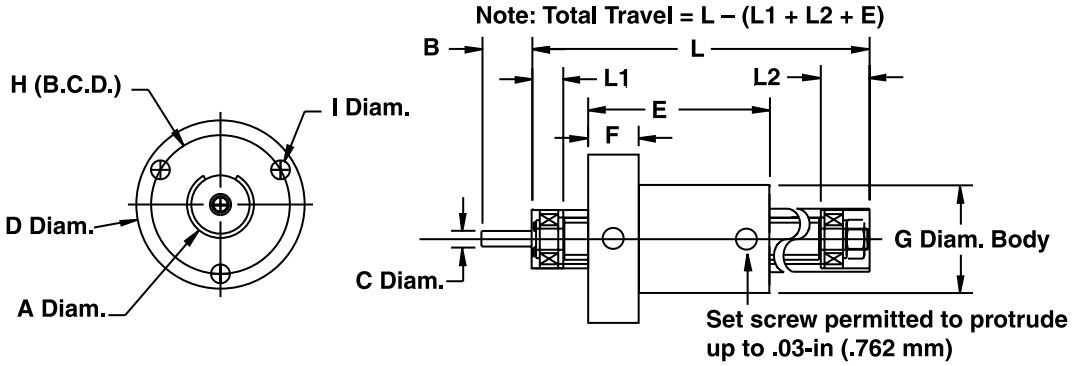

Kerk® SRZ Series Anti-Backlash ScrewRail® Linear Actuators

A nut designed and manufactured with our patented axial take-up mechanism providing continuous self-adjusting anti-backlash compensation.

Note: Right-hand/Left-hand ScrewRail® assemblies are also available.

ScrewRail®: SRZ Series Anti-Backlash

	A Diam. inch (mm)	B inch (mm)	C Diam. inch (mm)	D Diam. inch (mm)	E inch (mm)	F inch (mm)	G Diam. inch (mm)	H(B.C.D.) inch (mm)	I (Brass Inserts) inch (mm)	L1 inch (mm)	L2 inch (mm)
SRZ 03	.364/.367 (9.24/9.32)	.38 (9.56)	.1245/.1250 (3.16/3.18)	.98 (24.9)	1.1 (27.94)	.28 (7.2)	.75 (19.1)	.75 (19.05)	#2-56 (*)	.37 (9.4)	.38 (9.66)
SRZ 04	.489/.492 (12.42/12.5)	0.62 (15.75)	.1870/.1875 (4.75/4.76)	1.31 (33.3)	1.4 (36)	.38 (9.5)	.097 (24.7)	1.03 (26.2)	#6-32 (*)	0.26 (6.6)	0.36 (9.1)
SRZ 06	.739/.742 (18.77/18.85)	0.75 (19.05)	.2490/.2495 (6.33/6.34)	1.81 (46.0)	2.0 (51)	.50 (12.7)	1.38 (35.1)	1.48 (37.6)	#10-32 (*)	0.38 (9.7)	0.70 (17.8)
SRZ 08	.989/.992 (25.12/25.2)	0.75 (19.05)	.2490/.2495 (6.33/6.34)	2.30 (58.4)	2.5 (64)	.63 (15.9)	1.72 (43.7)	1.92 (48.8)	#10-32 (*)	0.48 (12.2)	0.77 (19.6)

* metric available as requested

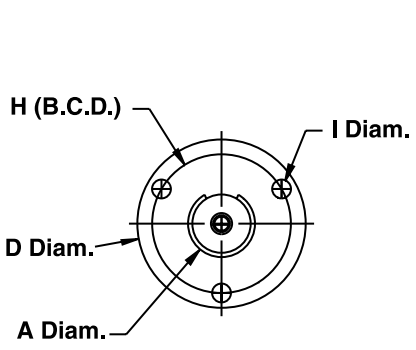

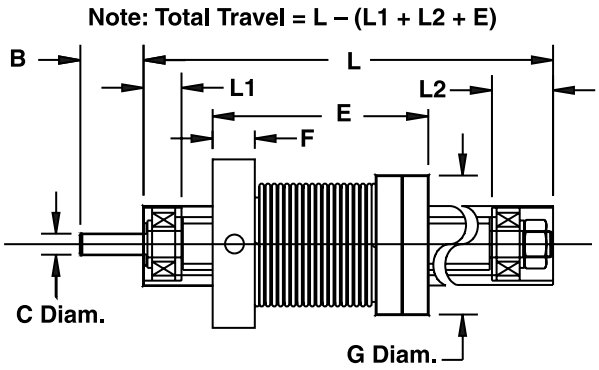

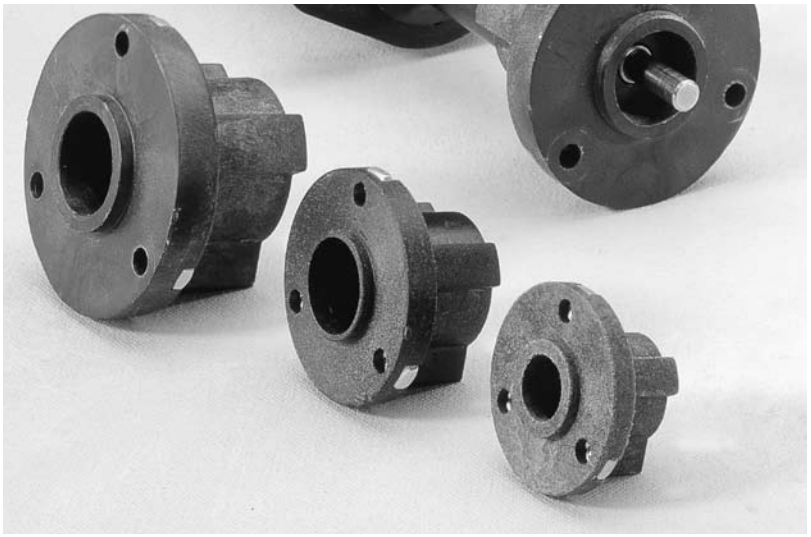

ScrewRail® Linear Actuators: End Supports

As an additional option for all Kerk® ScrewRails, standard End Supports offer the convenience of simple and compact mounting for the ScrewRail. The End Supports are designed to slide over the outside diameter of each end of the rail and "key" off the slot in the ScrewRail. The Kerkite® composite polymer End Supports come standard with three hex nuts that are captured in the flange for easy assembly. The End Supports are also supplied with a brass threaded insert and a set screw to fasten to the outside diameter of the rail.

With the End Supports, the Kerk ScrewRail can be easily mounted to your assembly. However, if the End Supports are not utilized it is recommended to center the clamping force on each end at the L3 dimension as shown in the drawing below.

ScrewRail®: End Support Styles

	A Diam. inch (mm)	D inch (mm)	F inch (mm)	H Diam. inch (mm)	L3 inch (mm)	L4 inch (mm)	Q inch (mm)	R inch (mm)	S inch (mm)	T (Hex Nut) inch (mm)	U inch (mm)	W Diam. (Brass Insert) inch (mm)	X inch (mm)	Y inch (mm)
SRA 04	.624/.626 (15.85/15.90)	1.35 (34.3)	0.200 (5.08)	0.150 (3.81)	0.390 (9.91)	.0720 (18.29)	0.080 (2.03)	0.060 (1.52)	#6-32 (*)	1.03 (26.2)	#8-32	0.47 (12.0)	0.460 (11.68)	0.500 (12.70)
SRA 06	.749/.751 (19.03/19.08)	1.60 (40.6)	0.250 (6.35)	0.173 (4.39)	0.603 (15.32)	0.900 (22.86)	0.100 (2.54)	0.100 (2.54)	#8-32 (*)	1.31 (33.3)	#10-32	0.60 (15.3)	0.594 (15.09)	0.645 (16.38)
SRA 08	.999/1.001 (25.38/25.43)	2.20 (55.9)	0.375 (9.53)	0.200 (5.08)	0.920 (23.37)	1.200 (30.48)	0.125 (3.18)	0.175 (4.45)	#10-32 (*)	1.82 (46.2)	#10-32	0.82 (20.9)	0.800 (20.32)	0.820 (20.83)

* metric available as requested

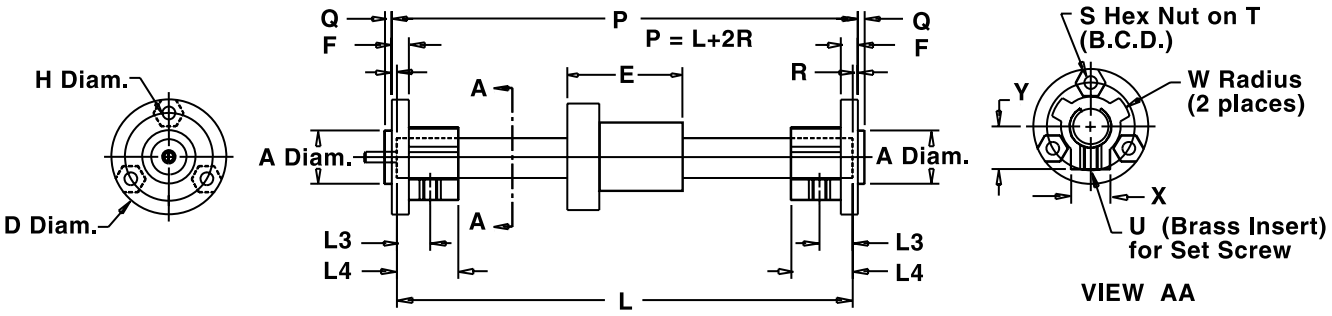

Dimensions E and L are referenced in the ScrewRail Dimensions
Note: Total Travel = L – (E + 2 [L4])

SRA Series Selector Chart ScrewRail® Linear Actuators

ScrewRail	Inch Lead ** inch (mm)	Thread Lead Code	Nominal Rail Diam. inch (mm)	Nominal Screw Diam. inch (mm)	Max. Drag Torque oz - in (NM)	Life @ 1/4 Design Loadx10⁶ (Non Anti-Backlash) inch (cm)	Torque-to-Move Lead oz-in/lb (NM/Kg)	Design Load lbs (Kg)	Screw Inertia per unit length oz-in sec²/in (KgM²/M)	Equivalent Diam.* inch (mm)
SRA 03	.050 (1.27)	0050	3/8 (10)	3/16 (5)	1.5 (0.014)	100 to 150 (250 to 380)	0.5 (0.007)	10 (50)	.1 x 10^{-5} (.4 x 10^{-6})	30 (7.6)
SRA 03	.100 (2.54)	0100	3/8 (10)	3/16 (5)	2.0 (0.018)	100 to 150 (250 to 380)	1.0 (0.016)	10 (50)	.1 x 10^{-5} (.4 x 10^{-6})	30 (7.6)
SRA 03	.250 (6.35)	0250	3/8 (10)	3/16 (5)	2.5 (0.020)	100 to 150 (250 to 380)	1.25 (0.019)	10 (50)	.1 x 10^{-5} (.4 x 10^{-6})	30 (7.6)
SRA 03	.375 (9.53)	0375	3/8 (10)	3/16 (5)	3.0 (0.025)	100 to 150 (250 to 380)	2.0 (0.030)	10 (50)	.1 x 10^{-5} (.4 x 10^{-6})	30 (7.6)
SRA 04	0.050 (1.27)	0050	1/2 (13)	1/4 (6)	2.0 (0.015)	150 to 200 (380 to 500)	0.5 (0.007)	25 (10)	.3 x 10^{-5} (1.3 x 10^{-6})	.39 (9.9)
SRA 04	0.250 (6.35)	0250	1/2 (13)	1/4 (6)	3.0 (0.020)	150 to 200 (380 to 500)	1.5 (0.023)	25 (10)	.3 x 10^{-5} (1.3 x 10^{-6})	.39 (9.9)
SRA 04	0.500 (12.7)	0500	1/2 (13)	1/4 (6)	4.0 (0.030)	150 to 200 (380 to 500)	2.5 (0.039)	25 (10)	.3 x 10^{-5} (1.3 x 10^{-6})	.39 (9.9)
SRA 04	1.000 (25.40)	1000	1/2 (13)	1/4 (6)	5.0 (0.040)	150 to 200 (380 to 500)	4.5 (.0.70)	25 (10)	.3 x 10^{-5} (1.3 x 10^{-6})	.39 (9.9)
SRA 06	0.100 (2.54)	0100	3/4 (19)	3/8 (10)	3.0 (0.020)	180 to 280 (450 to 710)	1.0 (0.016)	50 (20)	1.5 x 10^{-5} (6.5 x 10^{-6})	.60 (15.2)
SRA 06	0.200 (5.08)	0200	3/4 (19)	3/8 (10)	4.0 (0.030)	180 to 280 (450 to 710)	1.5 (0.023)	50 (20)	1.5 x 10^{-5} (6.5 x 10^{-6})	.60 (15.2)
SRA 06	0.500 (12.70)	0500	3/4 (19)	3/8 (10)	5.0 (0.040)	180 to 280 (450 to 710)	2.5 (0.039)	50 (20)	1.5 x 10^{-5} (6.5 x 10^{-6})	.60 (15.2)
SRA 06	1.000 (25.4)	1000	3/4 (19)	3/8 (10)	6.0 (0.045)	180 to 280 (450 to 710)	4.5 (0.070)	50 (20)	1.5 x 10^{-5} (6.5 x 10^{-6})	.60 (15.2)
SRA 08	0.100 (2.54)	0100	1 (25)	1/2 (13)	4.0 (0.030)	280 to 320 (710 to 810)	1.0 (0.016)	100 (45)	5.2 x 10^{-5} (20.0 x 10^{-6})	.81 (20.5)
SRA 08	0.200 (5.08)	0200	1 (25)	1/2 (13)	5.0 (0.040)	280 to 320 (710 to 810)	1.5 (0.023)	100 (45)	5.2 x 10^{-5} (20.0 x 10^{-6})	.81 (20.5)
SRA 08	0.500 (12.70)	0500	1 (25)	1/2 (13)	6.0 (0.045)	280 to 320 (710 to 810)	2.5 (0.039)	100 (45)	5.2 x 10^{-5} (20.0 x 10^{-6})	.81 (20.5)
SRA 08	1.000 (25.40)	1000	1 (25)	1/2 (13)	8.0 (0.060)	280 to 320 (710 to 810)	4.5 (0.070)	100 (45)	5.2 x 10^{-5} (20.0 x 10^{-6})	.81 (20.5)

*ScrewRail® stiffness may be modeled using Classical Beam Deflection Theory with equivalent stainless steel beam of diameter given.

** Other leads available as custom orders.

SRZ Series Selector Chart ScrewRail® Linear Actuators

ScrewRail	Inch Lead ** inch (mm)	Thread Lead Code	Nominal Rail Diam. inch (mm)	Nominal Screw Diam. inch (mm)	Max. Drag Torque oz - in (NM)	Life @ 1/4 Design Load x 10^6 (Non Anti-Backlash) inch (cm)	Torque-to-Move Lead oz-in/lb (NM/Kg)	Design Load lbs (Kg)	Screw Inertia per unit length oz-in sec^2/in (KgM^2/M)	Equivalent Diam.* inch (mm)
SRZ 03	.050 (1.27)	0050	3/8 (10)	3/16 (5)	2.0 (0.014)	50 to 80 (130 to 200)	0.5 (0.007)	10 (50)	.1 x 10^{-5} (.4 x 10^{-6})	30 (7.6)
SRZ 03	.100 (2.54)	0100	3/8 (10)	3/16 (5)	2.5 (0.018)	50 to 80 (130 to 200)	1.0 (0.016)	10 (50)	.1 x 10^{-5} (.4 x 10^{-6})	30 (7.6)
SRZ 03	.250 (6.35)	0250	3/8 (10)	3/16 (5)	3.0 (0.020)	50 to 80 (130 to 200)	1.25 (0.019)	10 (50)	.1 x 10^{-5} (.4 x 10^{-6})	30 (7.6)
SRZ 03	.375 (9.53)	0375	3/8 (10)	3/16 (5)	3.5 (0.025)	50 to 80 (130 to 200)	2.0 (0.030)	10 (50)	.1 x 10^{-5} (.4 x 10^{-6})	30 (7.6)
SRZ 04	0.050 (1.27)	0050	1/2 (13)	1/4 (6)	3.0 (0.020)	75 to 100 (190 to 250)	0.5 (0.007)	25 (10)	.3 x 10^{-5} (1.3 x 10^{-6})	.39 (9.9)
SRZ 04	0.250 (6.35)	0250	1/2 (13)	1/4 (6)	4.0 (0.030)	75 to 100 (190 to 250)	1.5 (0.023)	25 (10)	.3 x 10^{-5} (1.3 x 10^{-6})	.39 (9.9)
SRZ 04	0.500 (12.7)	0500	1/2 (13)	1/4 (6)	5.0 (0.040)	75 to 100 (190 to 250)	2.5 (0.039)	25 (10)	.3 x 10^{-5} (1.3 x 10^{-6})	.39 (9.9)
SRZ 04	1.000 (25.40)	1000	1/2 (13)	1/4 (6)	6.0 (0.045)	75 to 100 (190 to 250)	4.5 (.0.70)	25 (10)	.3 x 10^{-5} (1.3 x 10^{-6})	.39 (9.9)
SRZ 06	0.100 (2.54)	0100	3/4 (19)	3/8 (10)	6.0 (0.045)	90 to 140 (230 to 350)	1.0 (0.016)	50 (20)	1.5 x 10^{-5} (6.5 x 10^{-6})	.60 (15.2)
SRZ 06	0.200 (5.08)	0200	3/4 (19)	3/8 (10)	6.5 (0.047)	90 to 140 (230 to 350)	1.5 (0.023)	50 (20)	1.5 x 10^{-5} (6.5 x 10^{-6})	.60 (15.2)
SRZ 06	0.500 (12.70)	0500	3/4 (19)	3/8 (10)	7.0 (0.050)	90 to 140 (230 to 350)	2.5 (0.039)	50 (20)	1.5 x 10^{-5} (6.5 x 10^{-6})	.60 (15.2)
SRZ 06	1.000 (25.4)	1000	3/4 (19)	3/8 (10)	7.5 (0.053)	90 to 140 (230 to 350)	4.5 (0.070)	50 (20)	1.5 x 10^{-5} (6.5 x 10^{-6})	.60 (15.2)
SRZ 08	0.100 (2.54)	0100	1 (25)	1/2 (13)	8.0 (0.057)	120 to 160 (350 to 410)	1.0 (0.016)	100 (45)	5.2 x 10^{-5} (20.0 x 10^{-6})	.81 (20.5)
SRZ 08	0.200 (5.08)	0200	1 (25)	1/2 (13)	8.5 (0.060)	120 to 160 (350 to 410)	1.5 (0.023)	100 (45)	5.2 x 10^{-5} (20.0 x 10^{-6})	.81 (20.5)
SRZ 08	0.500 (12.70)	0500	1 (25)	1/2 (13)	9.0 (0.064)	120 to 160 (350 to 410)	2.5 (0.039)	100 (45)	5.2 x 10^{-5} (20.0 x 10^{-6})	.81 (20.5)
SRZ 08	1.000 (25.40)	1000	1 (25)	1/2 (13)	9.5 (0.067)	120 to 160 (350 to 410)	4.5 (0.070)	100 (45)	5.2 x 10^{-5} (20.0 x 10^{-6})	.81 (20.5)

*ScrewRail® stiffness may be modeled using Classical Beam Deflection Theory with equivalent stainless steel beam of diameter given.

** Other leads available as custom orders.

Haydon Kerk Motion Solutions, Inc. • www.HaydonKerk.com • Phone: 800.243.2715 • International: 203.756.7441

GR Series: Linear Rails and Bushings

Kerk® SS / SZ Series Spline Shafts

The Kerk® Spline Shaft (SS/SZ) series spline shaft system has been designed for light to moderate load applications, where low cost, low friction, and long life are primary design considerations.

Kerk Spline Shafts provide anti-rotation for one axis motion or a drive mechanism with rotation for two axes of motion. They are excellent alternatives for applications where hex shafts, square shafts and high-cost ball splines are typically used.

The assembly consists of a stainless steel spline shaft treated with Haydon Kerk Motion Solutions, Inc. proprietary low friction Kerkote® TFE coating, mated with a Kerkite® composite polymer bushing. The bushing is supplied with an integral brass collar to facilitate various mounting configurations without nut distortion.

Standard shaft straightness is .003-in (.08mm/30cm) per foot. Typical radial and torsional clearance between shaft and bushing for a basic assembly (SSA) is .002-in to .003-in (.05-.08mm). An anti-backlash assembly (SZA) is available for applications requiring minimum torsional play.

As with other Kerk® assemblies, special bushing configurations and end machining configurations are available upon request. Aluminum or carbon steel spline shafts are also available upon request.

Identifying the part numbers when ordering Spline Shafts and Guide Rails

SS	A	F	04	1	K	_	08	_	XXX
Prefix	***Style***	***Mounting***	***Rail Diameter***	***Number of Bushings per Rail***	***Coating***		***Length in Inches*** *(Rounded up)*		***Unique Identifier***
SS = Spline Shaft **SZ** = Anti-Backlash Spline Shaft **GR** = Guide Rail	**A** = Assembly **B** = Bushing only **S** = Shaft only	**F** = Flanged **T** = Threaded **G** = Snap ring groove **P** = Plain (no features) **S** = Shaft only	**02** = 1/8-in **04** = 1/4-in **06** = 3/8-in **08** = 1/2-in **12** = 3/4-in	**0** **1** **2** **3** **4** **5** (Use "0" for shaft only and use "1" if bushing only)	**S** = Uncoated **K** = Kerkote® **B** = Black Ice™		*Example:* **06** = 6-in, **08** = 8-in **00** = Bushing only		Number assigned by Haydon Kerk Motion Solutions *(for added features such as custom configurations, etc.)*

EXAMPLES:

SZAT041K-12-XXXX = Spline shaft with anti-backlash, shaft and threaded bushing assembly, 1/4-in shaft, 1 bushing per rail, Kerkote® coating, 12-in length, with no special features added.

GRBP041N-00-XXXX = Guide rail, plain bushing only, 1/4-in shaft, with no special features added.

SS Series Spline Shafts

	Rail Diameter Code	Shaft A in ± .002 (mm ± 0.05)	Root Diameter in ± .002 (mm ± 0.05)	Tube I.D. in ± .002 (mm ± 0.05)	Bushing Outside B in ± .001 (mm ± 0.025)	Bushing Length C in ± .01 (mm ± 0.25)	Thread M	Thread Length N in ± .002 (mm ± 0.05)	Equivalent Diameter** inch (mm)
SS/SZ	02	.125 (3.18)	.095 (2.41)	NA	0.375 (9.53)	0.500 (12.70)	3/8-24	0.250 (6.35)	.110 (2.79)
	04	0.250 (6.35)	.202 (5.13)	NA	0.500 (12.70)	0.75 (19.1)	7/16-20	0.250 (6.35)	.226 (5.74)
	06	0.375 (9.53)	.306 (7.77)	NA	0.625 (15.88)	1.00 (25.4)	9/16-20	0.375 (9.53)	.341 (8.65)
	08	0.500 (12.70)	4.19 (10.64)	NA	0.813 (20.65)	1.50 (38.1)	3/4-20	0.500 (12.70)	.458 (11.63)
	12	0.750 (19.05)	.630 (16.00)	NA	1.125 (28.58)	2.25 (57.2)	1-16	0.750 (19.05)	.690 (17.53)

MaximumTwist:
3°/ft about Spline Shaft axis

Torsional Clearance (SSA):
3° Bushing to Shaft

Spline Shaft stiffness may be modeled as a round rod with diameters given.

0.125-in rail size only available in SSAP and SSAT styles.

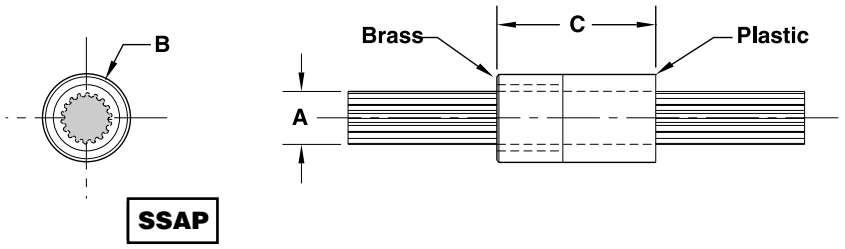

SSAP

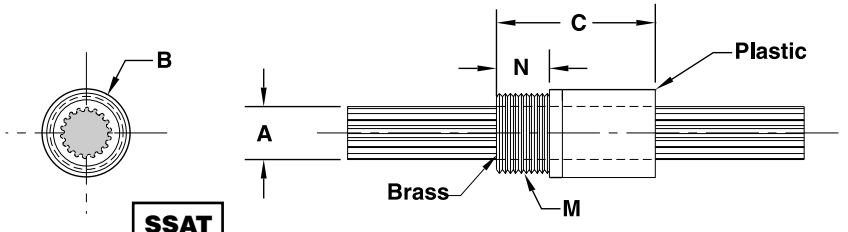

SSAT

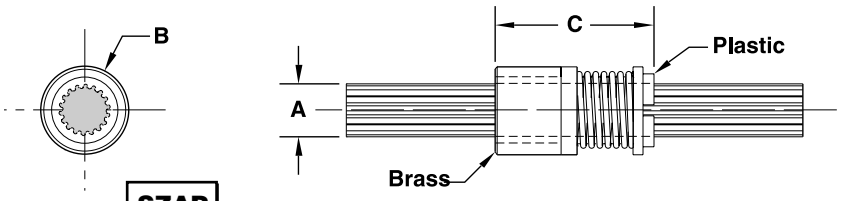

SZAP

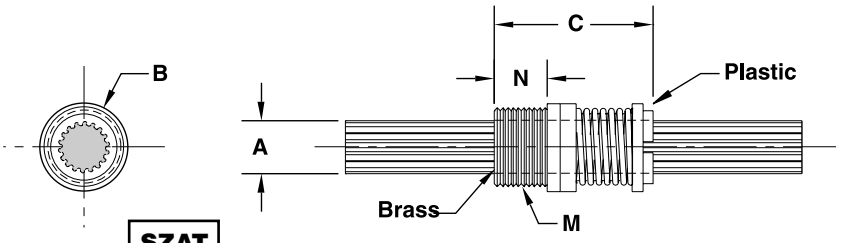

SZAT

Kerk® GR Series Linear Rails and Bushings

The GR Series linear rail system has been designed for light load applications where low cost, minimum frictional drag and long wear life are primary design considerations.

The assembly consists of a centerless ground and burnished stainless steel shaft mated with a Kerkite® composite polymer bushing. The material combinations have been selected so that thermal fluctuations have minimal effect on system performance. Additional lubricity and extended life can be obtained by using a low friction Kerkote® TFE coating on support shafts available in both stainless and alloy steel.

Standard shaft straightness is .002-in (0.05mm) per foot and typical radial clearance between shaft and bushing is .0005-in (.013mm) on non-coated assemblies and .001-in (.025mm) on Kerkote TFE coated assemblies.

Bushings are manufactured with standard retaining ring grooves.

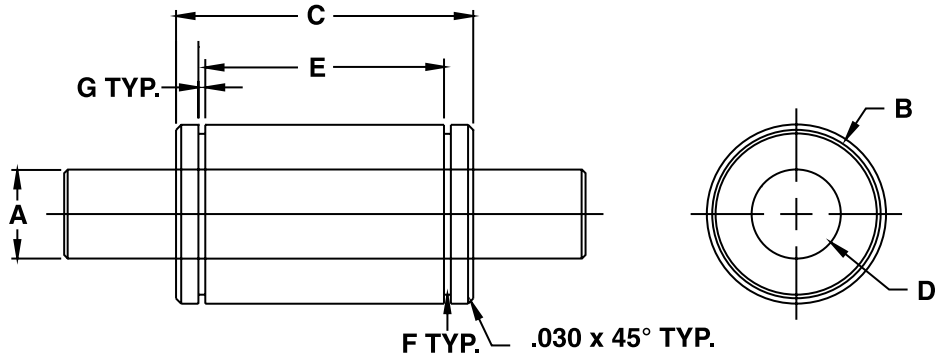

	Rail Diameter Code	Standard Part Lengths in ± .010 (mm 0.25)	Rail Diameter A in ± .0006 (mm 0.015)	Rail Diameter w/TFE A in ± .0006 (mm 0.015)	Bushing Outside Diam. B in ± .0006 (mm 0.015)	Bushing Length C in ± .010 (mm 0.25)	Bushing Inside Diam. D in ± .0005 (mm 0.013)	Snap Ring Groove Location E in +.010 −.000 (mm 0.25)	Snap Ring Groove Diam. F in ± .004 (mm 0.100)	Snap Ring Groove Width G in ± .0003 (mm 0.008)	Rail Chamfer H in (mm)	Radial Load lbs (Kg)
GR	04	6/8 10/12	.2475 (6.287)	.2472 (6.279)	.5000 (12.700)	.765 (19.43)	.2485 (6.311)	.535 (13.59)	.450 (11.43)	.040 (1.02)	.020 (.51)	5 (2.3)
	06	6/12 15/18	.3715 (9.436)	.3712 (9.428)	.7500 (19.050)	1.275 (32.39)	.3725 (9.462)	.995 (25.27)	.676 (17.17)	.046 (1.17)	.020 (.51)	10 (4.5)
	08	12/15 18/24	.4965 (12.611)	.4962 (12.603)	1.0000 (25.400)	1.660 (42.16)	.4975 (12.637)	1.330 (33.78)	.900 (22.86)	.046 (1.17)	.020 (.51)	15 (6.8)
	12	18/24 36	.7415 (18.834)	.7412 (18.826)	1.2500 (31.750)	2.036 (51.72)	.7425 (18.860)	1.620 (41.15)	1.125 (28.60)	.058 (1.47)	.030 (.76)	25 (11.4)

Haydon kerk
Motion Solutions
www.HaydonKerk.com
Phone: 800.243.2715
International: 203.756.7441

Haydon kerk Motion Solutions

Challenging Ideas Put Into Practical Motion

Linear motion control technologies that fuse design, materials and engineering principles to maximize system stiffness, smoothness and energy efficient motion. A pioneer in miniature linear actuator stepper motors with unmatched performance-to-size ratios, patented technologies and millions of configuration options.

www.HaydonKerk.com

Haydon kerk Motion Solutions

North American HQ/Operations

Haydon Kerk Motion Solutions, Inc.
Haydon Products Division
1500 Meriden Road
Waterbury, CT 06705
Telephone: 203.756.7441
info@HaydonKerk.com

Haydon Kerk Motion Solutions, Inc.
Kerk Products Division
1 Kerk Drive
Hollis, NH 03049
Telephone: 603.465.7227
info@HaydonKerk.com

Asia Operations

Haydon Linear Motors Co., Ltd.
Xianlong Industrial Park
No. 110, Lane 4, Xinyuan Road
New District, Changzhou, China 213031
Telephone: 86 - 519 - 85113316 / 85113312 / 88221022
Sales: 86 - 519 - 85123096 / 85139199 / 85139789
info@HaydonKerk.com.cn

Europe Operations

Haydon Motion Europe
57 rue des Vignerons
44220 Coueron - France
Telephone: 33 2 40 92 87 51
info-Europe@HaydonKerk.com

www.HaydonKerk.com